Catalog 390

An engineering and product selection guide

KAYDON®

an SKF Group brand







Kaydon **bearing** solutions

for Slewing Ring Bearings



www.kaydon**bearings**.com

Conversion Factors

	English-Metric	Metric-English
Length	1 in = 25.4 mm	1 mm = .03937 in
	1 ft = .3048 m	1 m = 3.281 ft
Force	1 lb = 4.448 N	1 N = 0.2248 lb
Torque/Moment	1 ft-lb = 1.356 N-m	1 N-m = .7376 ft-lb
	1 in-lb = .113 N-m	1 N-m = 8.851 in-lb
	1 in-oz = 72.01 gf-cm	1 gf-cm = .01389 in-oz
Weight	1 lb = .4536 kg	1 kg = 2.205 lb
	1 oz = 28.35 g	1 g = .03527 oz
Stress / Pressure	1 psi = 6895 Pa (N/m^2)	1 Pa = .000145 psi
	1 ksi = 6.895 MPa (N/mm^2)	1 MPa = .145 ksi
Temperature	(°F -32) /1.8 = °C	1.8 x °C + 32 = °F

(rounded to 4 significant digits)

an SKF Group brand

Kaydon **bearing** solutions

Slewing Ring Bearing Reference Guide

Home Office
2860 McCracken Street
Muskegon, MI 49441

+1 231.755.3741 tel
+1 231.759.4102 fax

Customer Service
800.514.3066 toll-free



Table of Contents

Page Number

- Conversions Factor chart (see Inside Front Cover) ..... IFC

Section 1 – Introduction & Overview 3

- Introduction 3
- Product Overview/Selection Guide 4
- Application Images 6

Section 2 – Technical Information & Guide 12

- Application & Load Analysis 14
- Bearing Features 18

Section 3 – Installation & Maintenance 23

- Design Considerations (for the equipment designer) 25
- Installation Instructions (for the equipment builder) 38
- Maintenance Instructions (for the equipment owner and/or user) 44
- Appropriate Grease Lubricants 44

Section 4 – Bearing Tables & Ratings 45

- Glossary 46
- RK Series Four-Point Contact 47
- HS Series Four-Point Contact 52
- HT Series Four-Point Contact 57
- MT Series Four-Point Contact 63
- Pinions for RK, HS & MT Series 70
- KH Series Four-Point Contact 71
- XT Series Four-Point Contact 75
- DT Series Eight-Point Contact 85
- XR Series Cross Roller 95
- TR Series Three-Row Roller 103

Section 5 – Specialty Products & Services 114

- WireX® Wire Race Bearings 115
- Custom Bearings 116
- Remanufacturing Program 118
- Endurakote® Plating 122

Section 6 – Appendix & Sales Information 124

- Specification Data Sheet 125
- Kaydon Website 127
- Kaydon Literature 128
- Warranty & Legal Information 129

The design and application information contained in this catalog is for illustration only. Responsibility for the application of the products contained in this catalog rests solely with the equipment designer or user. In spite of our best efforts, the material contained in this catalog may contain inaccuracies and typographical errors.

Introduction

Kaydon Bearings has been one of North America's leading producers of large diameter ball and roller bearings since it was established in 1941, and is considered one of the pioneers of large bearing technology.

Engineering Capability

In addition to a range of catalog slewing ring bearings, Kaydon can provide a wide range of custom manufactured bearings to meet your specifications. Upon request, Kaydon's experienced and knowledgeable professionals can provide engineering expertise and analysis in a wide variety of areas. Our engineering team uses current computer technology supported by advanced resources to analyze the most challenging specifications. With these resources we are able to rapidly provide cost-effective solutions that will meet your demanding specifications. The breadth of our product line will allow you to select the appropriate bearing type to suit your requirements.

Manufacturing

Kaydon is able to produce bearings up to 20 feet outside diameter using the most modern facilities and equipment in the industry. The fully integrated manufacturing facilities enable Kaydon to have complete control over all aspects of quality and provide effective scheduling to meet customer requirements. Continuing expansion and manufacturing versatility have led to our position as a leading supplier of all types and sizes of bearings for a variety of load combinations. Manufacturing flexibility allows us to produce small quantity orders to meet your needs.

Coatings

To enhance corrosion resistance, Kaydon has the capability to provide a painted surface, a zinc thermal spray coating, or other coatings as specified by the customer. Additionally, we offer Endurakote® plating which provides corrosion resistance and is effective in increasing wear resistance in sliding surface contacts.

Quality

The Kaydon quality assurance program meets the requirements of ISO 9001:2000 in addition to many other stringent military and government requirements. Kaydon uses methodologies such as Six Sigma and Lean Manufacturing to maintain world-class operations. These support our commitment to establish and maintain an environment of continuous improvement. Product quality is further ensured by testing and measuring using the latest technology which allows us to meet the stringent requirements of our customers.

Support Network

From design to final delivery, a dedicated customer service team is available to support you all the way through the process. Kaydon has a strong team of highly trained field personnel to support both our direct customers and our extensive distribution network. Our experienced engineers are also available to provide on-site trouble-shooting and installation support as requested and appropriate. Worldwide, we have service facilities in strategic areas to provide the full technical and sales support that our customers deserve and expect.

Product Overview and Selection Guide

RK Series	HS HT MT & KH Series	XT Series
	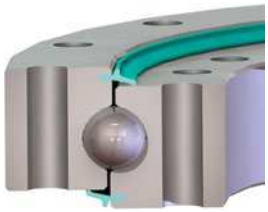	
Design		
▮ Four-Point Contact Ball ▮ Flanged cross-section on non-geared rings ▮ Internal, external, and non-gear versions available from stock	▮ Four-Point Contact Ball ▮ Rectangular cross-section ▮ KH Series are preloaded with precision runouts ▮ External and non-gear versions available from stock	▮ Four-Point Contact Ball ▮ Wide range of diameters and various cross-sections ▮ More capacity potential than RK & MT Series due to size ▮ Internal, external, and non-gear versions
Size		
▮ 20" to 47" OD	▮ 4" to 66" OD	▮ Up to 240" OD
Potential Capacities		
▮ Moment – 141,000 ft-lbs ▮ Thrust – 175,000 lbs ▮ Radial – 35,000 lbs	▮ Moment – 900,000 ft-lbs ▮ Thrust – 1,150,000 lbs ▮ Radial – 230,000 lbs	▮ Moment – 10,000,000 ft-lbs ▮ Thrust – 6,000,000 lbs ▮ Radial – 1,300,000 lbs
Typical Applications		
▮ Small cranes ▮ Industrial positioners ▮ Rotary tables ▮ Rotating displays ▮ Bottling machines ▮ Conveyors	▮ Cranes and Manipulators ▮ Aerial lifts ▮ Wind turbines/Solar panels ▮ Position/Index tables ▮ Radar & Satellite antennas ▮ Robots ▮ Medical equipment	▮ Cranes ▮ Aerial lifts ▮ Excavators ▮ Wind turbines/Solar panels ▮ Utility derricks ▮ Log loaders & feller bunchers ▮ Mining equipment
Sample Application		
		

Product Overview and Selection Guide

DT Series	XR Series	TR Series
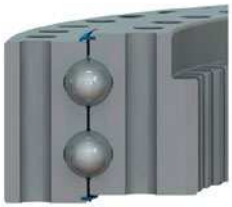		
Design		
▮ Eight-Point Contact Ball ▮ Two matched rows of four-point balls ▮ Potentially 80% more capacity than four-point of a given diameter ▮ Rectangular cross-section ▮ Internal, external, or non-gear	▮ Cross Roller ▮ Single row of rollers having alternating orientation ▮ Greater stiffness and dynamic capacity than a four-point contact bearing ▮ Internal, external, or non-gear	▮ Three-Row Roller ▮ Three independent rows of rollers, oriented for optimal performance ▮ Greatest stiffness and capacity for a given diameter ▮ Internal, external, or non-gear
Size		
▮ Up to 240" OD	▮ Up to 315" OD	▮ Up to 315" OD
Potential Capacities		
▮ Moment – 20,000,000 ft-lbs ▮ Thrust – 9,000,000 lbs ▮ Radial – 2,000,000 lbs	▮ Moment – 7,000,000+ ft-lbs ▮ Thrust – 3,000,000+ lbs ▮ Radial – 1,400,000+ lbs	▮ Moment – 50,000,000+ ft-lbs ▮ Thrust – 18,000,000+ lbs ▮ Radial – 4,000,000+ lbs
Typical Applications		
▮ Excavators ▮ Large cranes ▮ Marine cranes ▮ Wind turbines ▮ Telescopes ▮ Mining equipment	▮ Radar & satellite antennas ▮ Turrets ▮ Machine tools ▮ Tunnel boring machines	▮ Tunnel boring machines ▮ Cranes ▮ Excavators ▮ Stackers and reclaimers ▮ Heavy mill equipment ▮ Mining shovels
Sample Application		
		

Applications - Renewable Energy Wind & Solar





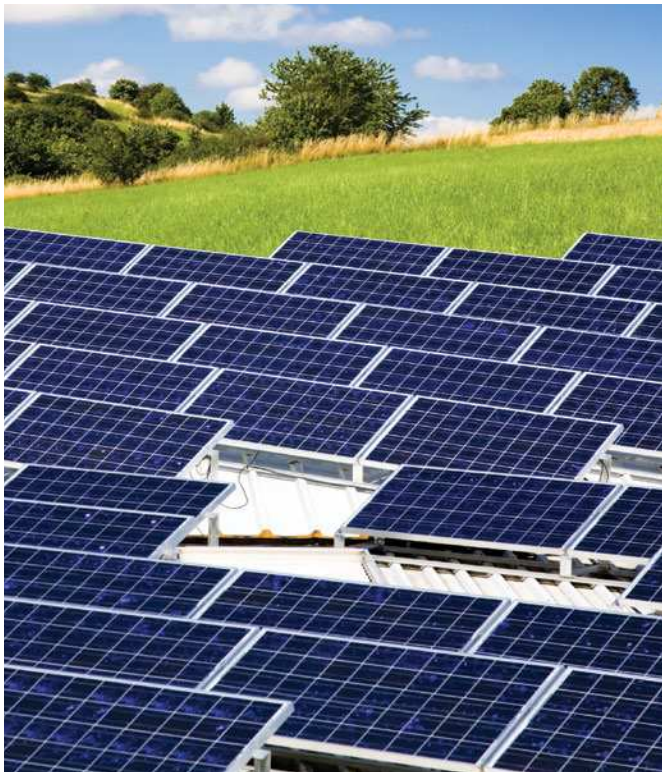



Applications - Medical



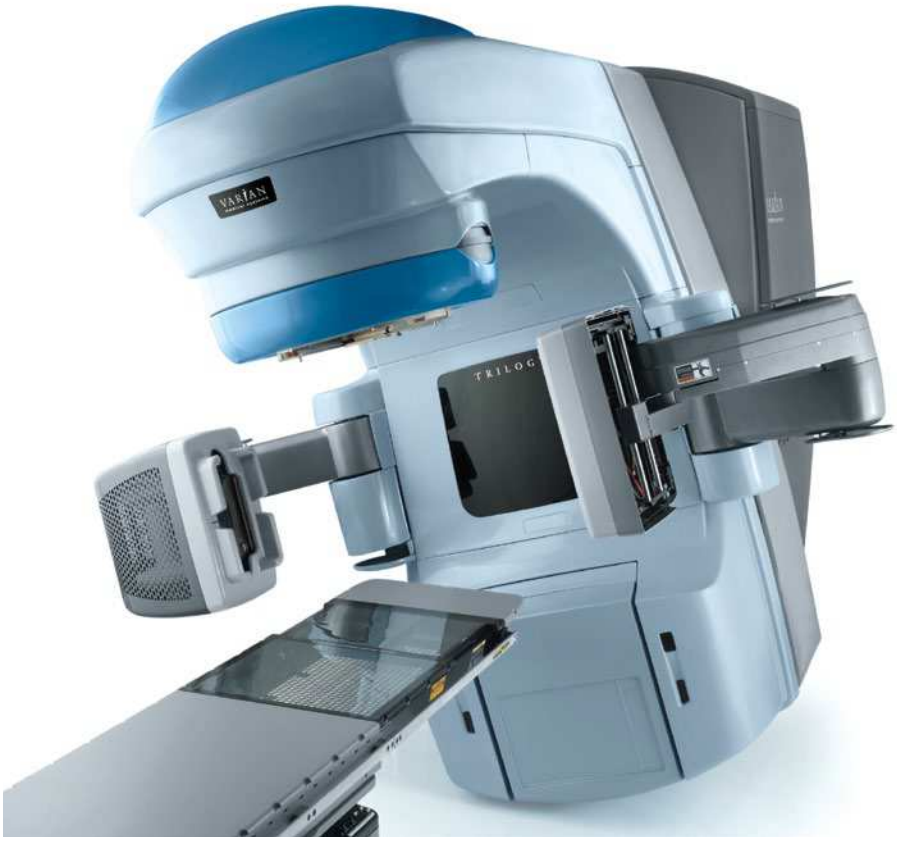

Photo Courtesy of
Varian Medical Systems

Applications - Heavy Equipment







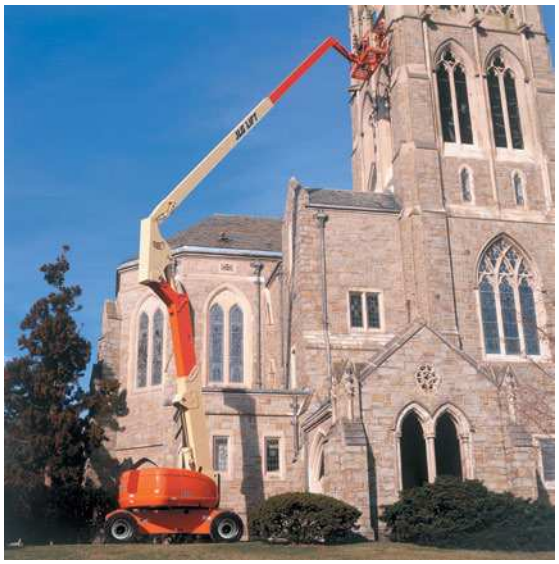









Applications - Machinery







FMC Jetway Apron Drive Passenger Boarding Bridge. © 2007 Photo by P. Michaud. Courtesy of FMC Technologies, Jetway.





Applications - Military



Image Courtesy of US Army.



Image Courtesy of US Navy.



Image Courtesy of US Army.



Image Courtesy of US Army.

Section 2 Contents
Technical Information & Guide

	Page Number
Function	13
Selection	13
Application	14
Features	18
Properties	20

Technical Information & Guide

Function of a slewing ring bearing

A bearing serves as a connection between two adjacent structures, allowing rotation and transmission of load between them. In addition to satisfying this requirement, a slewing ring bearing typically includes features for simple and quick attachment to those adjacent structures, and commonly a feature to facilitate the mechanical rotation of one ring and its adjoining structure relative to the other.

Kaydon slewing ring bearings described in this catalog are typically used in applications where their ability to transmit relatively high loads is of primary importance. However, other potential application requirements such as rotational speed, protection from contamination, accuracy, frictional resistance, and the temperature range of the operating environment could have a significant impact in the selection of an appropriate slewing ring bearing.

The following sections discuss application criteria and provide a guideline for selecting a slewing ring bearing.

Upon request, Kaydon is available to assist in the selection of a Kaydon slewing ring bearing. If such assistance is requested, we suggest that you complete the SPECIFICATION DATA SHEET found in Section 6.

Suggested selection procedure

1. Review the following APPLICATION INFORMATION section before proceeding with bearing selection. The APPLICATION INFORMATION section is a guide for selecting a bearing used in a NORMAL APPLICATION as defined on page 16.

2. Determine the maximum bearing loads. These loads must include all dynamic and static loads imposed on the bearing. The loads in turn must be transposed to loads acting at the bearing's center. See Figure 2-1.

Some specific items to consider are:

- All applied forces to the bearing and gear. Not only the rated and working loads but also those that may occur when equipment is at rest, such as that due to wind for larger structures.
- Loads imposed during overload or testing situations.
- Loads imposed during assembly or disassembly.
- Weights of all members of the structure which are supported by the bearing.
- All possible combinations of maximum loads. A crane, for example, usually has a number of conditions of load versus working radii, both during use and at time of overload testing.

3. Multiply the calculated loads by the applicable service factor: See page 17.

4. If an integral gear is desired, determine the required gear capacity. As with the bearing loads, consideration must be given to all conditions that would generate potential gear loads; some examples include those while working, static, on incline, and overload testing. One must also consider the duty cycle at each of these conditions. See discussion about Torque on page 15 for assistance in determining bearing rotational resistance.

5. Determine the preferred mounting arrangement, considering the pinion and gear location as well as installation and continued maintenance of the bearing and retaining bolts. See Section 3.

6. Refer to the Product Overview and Selection Guide on pages 4&5, and then the individual bearing style sections for potential bearings.

7. ⚠ Make a preliminary selection by comparing the previously calculated bearing loads, including service factor, to the bearing's load rating curve. Ensure that all load combinations are below the curve. In many cases there will be a choice of several bearings meeting the required load ratings.

8. If applicable, check the gear rating of the selected bearing.

9. ⚠ Confirm that the mounting bolts, mounting plates, and joint arrangements are suitable for the installation. See pages 32 to 34.

10. The bearing you select must meet your design requirements.

Technical Information & Guide

Application information

Load

A slewing ring bearing can be designed for use in applications where loads originate from a single direction or multiple directions relative to its axis of rotation. All of these loads can be resolved into four resultant loads acting on, about, or through the bearing's center. They are referred to as radial, axial, moment and torque. These are used to evaluate the size and capacity of the bearing and integral gear if one is incorporated. Three of these loads are visually depicted in Figure 2-1. The fourth, torque, acts in a manner as to try to rotate one of the bearing rings relative to the other.

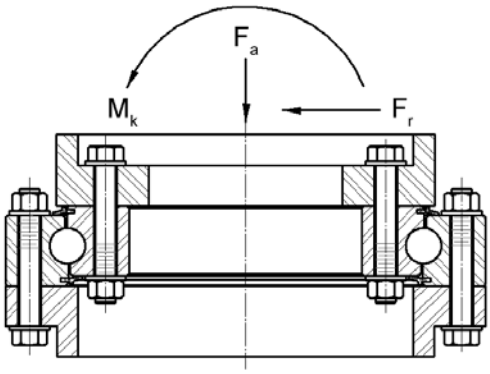

Resultant forces acting on or about bearing

Figure 2-1

Load originated by the equipment and work being conducted is transmitted to the bearing through the mounting structure and mounting bolts. While slewing ring bearings have the ability to accept all types of load combinations, they are primarily designed for loads aligned parallel to the bearing's axis of rotation. These axial or thrust loads originate from a source located at a distance from the bearing's axis of rotation and also generate a moment load about the bearing's center.

Typically, axial loads are applied in a manner that would tend to compress the bearing faces toward each other. See Figure 2-2. Such loads are distributed uniformly around the mounting structures and surface area of the mating bearing rings, permitting a more even load distribution to the rolling elements within. The result is a lower stress level on all components involved in the transmission of the load.

⚠ When the axial load is "suspended" from the bearing, it is concentrated predominantly in a smaller area around the bolts. This is a critical difference that must be considered in the design. See Figure 2-3.

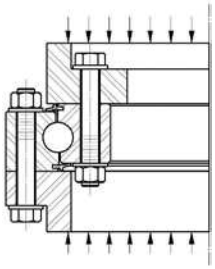

Compression axial load

Figure 2-2

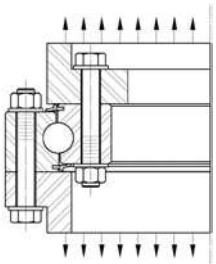

Tension (suspended) axial load

Figure 2-3

A load aligned perpendicular to the bearing's axis of rotation is referred to as radial. When the radial load originates from a source located above or below the bearing's rolling elements, it generates a moment load about the bearing's center. In applications where radial load is significant (defined as greater than 10% of any axial load) or the predominant load, our standard slewing ring bearings may require modified contact angles, ball separators, mounting hole configurations, or the addition of piloting diameters to accommodate these forces.

Speed

Slewing ring bearings are generally used where rotational speed is slow, intermittent, and oscillatory. The permissible speed limits for various Kaydon slewing ring bearings are shown on page 20.

Accuracy

The typical slewing ring bearing application does not require accurate positioning of the rotating structure relative to the stationary one. Therefore all bearings shown in this catalog, excluding the KH Series, are not supplied with diameter tolerances to permit accurate and repetitive positioning.

Technical Information & Guide

Some applications require a high degree of accuracy and are dependent on the bearing to achieve it. Early consultation with Kaydon can lead to use of a slewing ring bearing furnished with the features necessary to provide the accuracy and repetitive positioning needed. Should a mechanical drive be required, making it integral to the bearing reduces the number of components involved, decreasing tolerance build-up that adversely affects accuracy.

Torque

In most applications of large-diameter bearings, the force required to overcome bearing friction, or resistance to rotation, is small compared to that required to overcome the inertia of the mass being supported provided the bearing is properly mounted and contains the standard internal clearance. Bearings include a minimal amount of clearance to minimize the possibility of tight spots resulting from ordinary imperfections in the mounting. Refer to Section 3 for detailed discussion. A bearing distorted by out-of-flat or out-of-round mounting surfaces may require an excessive amount of turning torque. The same is true for a bearing mounted on a structure which deflects locally under load. Other primary factors affecting bearing friction include contact angle, separator, seals and lubricant.

For relatively small loads, the slewing ring bearing may be rotated manually. However, for applications that involve high loads and torque or where manual rotation is undesirable or impractical, a mechanical means of rotating the bearing and desired mating member can usually be accommodated.

Features allowing mechanical rotation of the equipment include gears, sprockets, v-grooves, and timing belt teeth integral to one of the slewing ring bearing rings. The most common solution is to incorporate a gear on one of the slewing ring bearing rings as reflected in various bearing series throughout this catalog. This practice eliminates the need for a separate gear and the additional cost and installation requirements associated with it.

Environment

Slewing ring bearings are suitable for use indoors or outdoors, where conditions consist of indirect exposure to moisture and contamination, and the temperatures range from -40°F to +140°F (-40°C to +60°C). Operation beyond these temperature extremes may require changes of lubrication and non-metallic material used in the standard slewing ring bearings. Operation in very dirty or wet environments may require use of additional seals or shields on the mounting structure to limit exposure of the bearing.

Coatings

To enhance corrosion resistance, Kaydon has the capability to provide a painted surface, a zinc thermal spray coating, or other coatings as specified by the customer. Additionally, we offer Endurakote plating which provides corrosion resistance and is effective in increasing wear resistance in sliding surface contacts.

Mounting arrangement

A widely used method of attaching slewing ring bearings is to bolt through both races with fasteners spaced uniformly around the entire mounting face. It is recognized, however, that the equipment designer cannot always accommodate this type of arrangement and may require tapped holes and even special bolt patterns for assembly and maintenance reasons.

⚠ The designer is responsible for the mounting arrangement and validating the design.

Weld rings are another option for attaching one of the slewing ring bearing rings to its mating structure. The bearing is furnished with a low carbon steel weld ring or band welded to one race. The weld ring can then be welded to the machine without damage to the bearing, provided proper precautions are taken. As the use of weld rings is infrequent, they are not addressed in this catalog. For such designs contact Kaydon.

⚠ Welding the bearing, or welding near the bearing, can damage the bearing.

Lubrication

Grease is the typical lubricant used for slewing ring bearings. Periodic application of fresh lubricant into the

Technical Information & Guide

bearing is required to reduce friction and wear, provide corrosion protection, displace contaminants, and enhance performance of the seals. One or more grease fittings or lubrication holes are provided in all slewing ring bearings for this purpose. Additional lube fittings or holes may be required and can be furnished on request.

Whenever the slewing ring bearing has an integral gear, it too requires periodic application of grease for optimum performance. For further discussion of lubrication see page 44 (Section 3).

Normal application

Special attention must be given to bearing selection whenever application conditions are different from those considered normal. For a "normal application" of slewing ring bearings, the following conditions should apply:

- Vertical axis of rotation
- Predominant compressive thrust and moment loading
- Radial load not in excess of 10% of the thrust load
- Intermittent rotation with pitch line velocity limited to 500 fpm for single row bearings and 300 fpm for multi-row bearings as shown in this catalog
- Operating temperature within -20°F to +140°F (-29°C to +60°C)
- Mounting surfaces machined and reinforced to limit deviation from a true plane to the levels indicated on pages 25 to 31, Figures 3-1 to 3-9
- Installation procedure to assure roundness of both races, such as by applying a centered thrust load while tightening the bolts using the alternating star pattern (see Section 3)
- Provision for periodic lubrication
- Provision for periodic checking of mounting bolts to verify their proper tension

Service factors

Refer to Table 2-4 for the appropriate application service factor. The load rating curves shown in this catalog have an application service factor of 1.00. To determine the required bearing rating, multiply the application service factor by the applied loads on the bearing.

Application service factors are based on a number of considerations, but primarily the frequency of use at higher vs. normal loads and potential for extreme or overload. If the intended equipment and application do not appear in Table 2-4, for initial sizing select a comparable application. If there is a question concerning this selection, contact Kaydon. If the application involves more frequent operation than indicated in the above paragraphs and definitive duty cycles for loads, speeds, and oscillation are available, complete and submit the Specification Data Sheet in Section 6. For such applications, the fatigue life of both the bearing and gear may dictate the designs required, and service factors should not be the sole criterion used for selection of a slewing ring bearing.

There is no industry-wide standard for rating the capacity of slewing ring bearings. As a result, it is not uncommon for bearing vendors' ratings and service factors to vary and still result in the same approximate bearing design and size for a given application. Also, these factors may be superseded by customer specification, FEA (Finite Element Analysis) classifications, or regulations by certifying authorities.



The equipment designer is responsible for determining the correct service factor. This can be done with the suggestions from and assistance of Kaydon, upon request.

Technical Information & Guide

Table 2-4 - Service Factors

Application	Service Factor
Aerial Lift Devices – Aerial baskets, platforms, ladders, etc.	1.00
Amusement Rides	Alternate Criteria *
Coiler/Uncoiler	Alternate Criteria *
Conveyors	1.00
Cranes	
Mobile - (loads limited by machine stability)	
Normal construction duty (tire mounted)	1.00
Normal construction duty (crawler mounted)	1.10
Production duty such as scrap and ship yards	1.25
Forestry handling (logging)	1.50
Stacker cranes (must include dynamic forces as loads)	1.25
Pedestal or Tower - (loads not limited by machine stability)	
Loads continually monitored by safe load device	1.25
Applications with risk of sudden impact load application	1.50
Offshore	Alternate Criteria *
Excavators	
Load limited by tipping	1.25
Load limited by hydraulic pressure relief	1.50
Hook and Grab Rotators for Cranes	Alternate Criteria *
Index and Turnstile Tables – (include any shock loads for evaluation)	
Occasional use with intermittent rotation	1.00
Frequent use with intermittent rotation	1.25
Frequent use with intermittent rotation and impact loads	1.50
Continuous rotation	Alternate Criteria *
Industrial Manipulators and Robots	
Occasional service	1.00
Frequent service	1.25
Continuous service	Alternate Criteria *
Mining Shovels	Alternate Criteria *
Stacker -Reclaimer	Alternate Criteria *
Steel Mill	
EAF	Alternate Criteria *
Ladle Cars	Alternate Criteria *
Ladle Turrets	Alternate Criteria *
Steering Gear – (must include dynamic and shock loads due to transit forces)	
Pneumatic Tires	1.25
Solid Tires	1.50
Tunnel Boring Machine	Alternate Criteria *
Water Treatment Clarifiers, Thickeners, and Rotary Distributors	Alternate Criteria *
Wind Turbines	Alternate Criteria *

* As this application involves additional criteria, it requires use of an alternative method for evaluation and selection of the slewing ring bearing.

Technical Information & Guide

Slewing ring bearing features

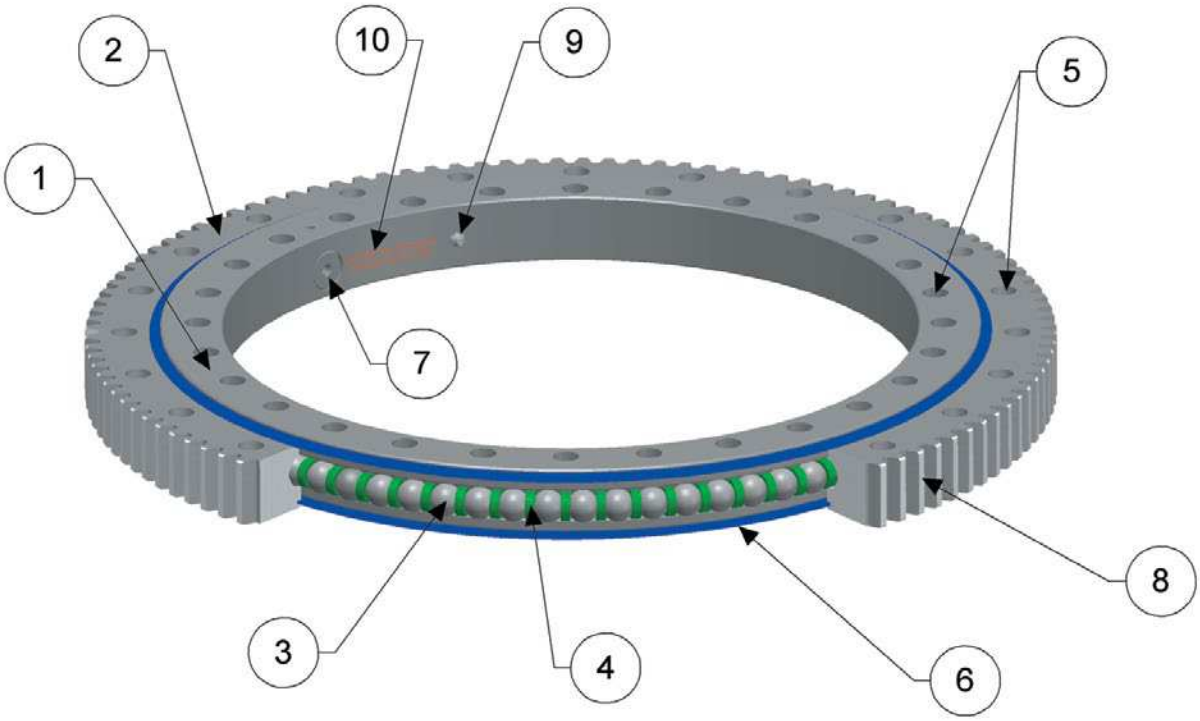

Inner and outer rings (1 and 2)

The bearing consists of an inner and outer ring made of medium carbon steel. Each includes at least one precision raceway arranged to transfer loads and relative motion from one structure of the equipment to the other. The raceways are selectively hardened to the required surface and depth necessary to transmit high stresses imposed during operation of the equipment. Figure 2-5 reflects the typical hardness patterns of four-point ball (RK, HS, HT, MT, KH, and XT Series) and cross roller (XR Series) bearings. Multiple row bearings (DT and TR Series) receive similar treatment in their highly stressed raceways. In one location around the raceway, there is an unhardened area referred to as the hardness gap or "soft spot." This area is relieved to minimize the ability of the rolling element to apply stress on it. Only one side of each ring is manufactured to be mated with the supporting structure. One or both rings may include an integral drive mechanism such as gear or sprocket teeth to enable the mechanical advantage necessary to overcome rotational resistance and provide relative motion through the bearing.

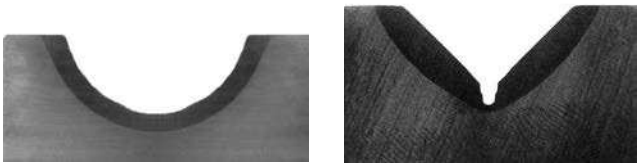

Hardened Pattern for Ball Raceway

Hardened Pattern for Roller Raceway

Figure 2-5

Rolling elements (3)

Precision rolling elements enable relative rotation and transmit load between the inner and outer rings. Hardened chrome alloy steel balls or rollers may serve as the rolling elements. They are sized appropriately for the anticipated stresses and closely matched to provide uniform load distribution between the rings and minimize rotational resistance.

Technical Information & Guide

Spacers (4)

Spacers separate the rolling elements and are designed to minimize friction, skidding, and jamming during rotation. These conditions occur as a result of load distribution and distortion of the mounting structures and bearing rings during operation of the equipment. Spacers are generally made of a plastic material compatible with typical lubricants and operating environments.

Occasionally for ball bearings, a ball of smaller size is placed between the larger load-carrying balls instead of a spacer. These are referred to as "spacer balls" and can provide a solution to a unique condition specific to a particular application. Where the application warrants, a separator is used in place of the spacers or spacer balls.

Mounting holes (5)

The ideal hole pattern for attaching both rings of the slewing ring bearing is a full circle of uniformly spaced through holes. It is recognized, however, that the equipment designer cannot always accommodate this type of arrangement and may require tapped holes and even special bolt patterns in one or both rings for assembly and maintenance reasons.

Kaydon has accommodated these special mounting requirements. Samples of these options are shown in Figure 2-6.

⚠ The equipment designer, manufacturer, or user is responsible for determining if the mounting design is adequate. Some methods employed in making this determination are to perform analysis and then tests to evaluate and validate the structure, fasteners, and joint for adequate strength and integrity to sustain the maximum and all repetitive loads possible.

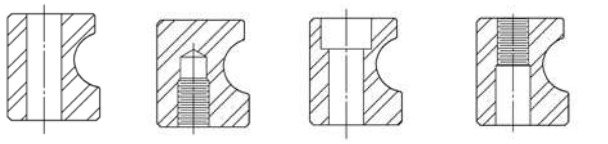

Through Hole | Threaded Hole | Counter-Bored Hole | Far Side Threaded Hole

Figure 2-6

Seals (6)

A seal is included on each side of Kaydon slewing ring bearings for retention of lubricant and protection of the bearing from dust and small particle contamination. The seals are made of an elastomer material compatible with most general purpose lubricants having mineral oil and greases using lithium or calcium thickeners. If conditions require different sealing, Kaydon can provide details of additional options upon request.

Loading (Filler) Plug (7)

The rolling elements in Kaydon bearings may be inserted through a hole drilled radially through the non-geared race and then plugged. The plug is retained mechanically with a pin to assure proper orientation is maintained. TR Series bearings, however, do not have a loading plug as they require one of the rings be split for assembly of all the rolling elements. ⚠ Removal of the load plug voids the warranty.

Gear (8)

Slewing ring bearings can be supplied with gear teeth as an integral part of either the inner or outer ring. They are typically a standard full depth or stub involute spur gear having a 20° pressure angle with provision for backlash and conforming to AGMA Q6 quality.

However, where required, modifications of the basic tooth forms, pressure angles, and quality can be provided. For assembly purposes, the maximum point of gear runout is identified with yellow paint. Alternative methods may be applied upon request.

Grease Fitting (9)

At least one grease fitting is supplied in one of the bearing rings for periodic lubrication of the raceway and internal components. On designs with integral gear teeth, it is located in the non-geared ring. The number supplied typically increases with bearing diameter. More or less may be included upon request.

Identification (10)

Identification consists of the bearing part number and serial number. This information is located next to the filler plug.

Technical Information & Guide

Slewing ring bearing properties

Load rating

The majority of slewing ring bearing applications require the bearing to transmit static load or high loads at slow rotation with operation being intermittent. In such applications, the fatigue life of the internal bearing complement is less of a concern than the bearing's static and infrequent load capability. Most bearing selection is based on the Kaydon load rating chart and an appropriate service factor for the intended application (see Service Factors Table 2-4, page 17).

Use of the Kaydon load rating charts requires compliance to all instructions and guidelines provided in the Installation and Maintenance section of this catalog; refer to pages 25 to 44.

⚠ Failure to follow above recommendations can severely limit ability of the bearing, retaining bolts, and adjacent mounting structures to safely transmit the indicated loads.

Load rating charts with a service factor of 1.00 are shown for all bearings listed in this catalog, except for the KH and XR Series. Bearings from either of these series are used where operating conditions and performance expectations require different selection criteria. To further assist the designer in making a KH or XR Series selection, ratings and performance results are provided.

If the application involves more frequent operation than indicated on page 16 and definitive duty cycles for loads, speeds, and oscillation are available, Kaydon can assist in bearing selection, upon request. If such assistance is requested, it is recommended that one complete and submit the Specification Data Sheet in Section 6.

For such applications, the fatigue life of both the bearing and gear may dictate the designs. As a result, service factors should not be the sole criterion used for selection of a slewing ring bearing.

Speed

The rotation of single-row slewing ring bearings such as the RK, HS, HT or MT Series should be intermittent and limited to a maximum pitch line speed of 500 feet per minute (fpm). For bearings with multiple rows of rollers such as the DT and TR Series, the maximum pitch line speed should be limited to 300 fpm on an intermittent basis. The KH and XR Series are appropriate to use for continuous rotation at 500 fpm and infrequent rotation up to 750 fpm. Modifications may be made to any of these bearings to permit continuous rotation and load at speeds exceeding the values given. Modifications may include change in internal clearance, contact angle, clearance, rolling element separation, or seals. If assistance is required, contact Kaydon for a bearing to meet your specific requirements.

Accuracy

All slewing ring bearings shown in this catalog, with the exception of the KH Series, are furnished with sufficient internal clearance to allow for some imperfections of mounting surfaces and for small amounts of deflection under load. They are not furnished with external diameters having a low tolerance to permit accurate positioning of the rotating structure relative to the stationary one. Upon request, Kaydon can supply bearings with reduced clearance or preload, reduced runout, and external diameters for location purposes.

The KH Series is provided with no internal clearance and closely held external diameters for those applications requiring additional accuracy. See page 72 for additional information concerning accuracy of the KH Series. If necessary, bearings can be furnished with reduced internal clearance to minimize "rock." Extra care should then be taken to assure the installed bearings will be round and flat to maximize bearing capacity and performance. See pages 25 to 31 (Installation & Maintenance).

Our standard integral gear is manufactured in accordance with AGMA Class Q6 quality, excluding the KH Series. Should the application warrant, gears can be supplied to AGMA Class Q11 quality. The integral gear supplied on the KH Series is in accordance with AGMA Class Q8 quality.

Technical Information & Guide

Rotational friction (Torque)

The friction torque for a slewing ring bearing due to external loads can be estimated using the following equation. This assumes the bearing is mounted according to the guidelines provided in the Installation & Maintenance Section, pages 25 to 44 of this catalog. This is an estimate and is significantly influenced by fluctuations in critical features; therefore, it is advisable to account for additional torque when initially selecting the drive arrangement. Once some experience with the application has been accumulated, the drive arrangement can be altered accordingly. Also note, the equation is not valid when the application loads equal zero, as there will still be some rotational resistance due to the weight of the rotating components and frictional resistance of the seals and lubricant.

$$M_w = \frac{\mu\,(4.4M_k + F_a D_p + 2.2F_r D_p)}{2}$$

Where: M_w = bearing torque under load, (ft-lbs)

μ = friction coefficient

= .006 for RK, HS, HT, MT, KH, XT, and DT Series

= .004 for XR and TR Series

M_k = moment load, (ft-lbs)

F_a = axial load, (lbs)

F_r = radial load, (lbs)

D_p = bearing pitch diameter, (ft)

Gear rating

Tangential gear tooth ratings are shown in the selection tables for each applicable bearing and gear combination. These ratings only consider bending fatigue strength being generated using the commonly accepted Lewis Equation. They are suitable for sizing when the application involves low speed and intermittent/oscillatory rotation. For applications with higher duty cycles, or frequent and rapid acceleration it may be necessary to use alternative methods, including surface fatigue for determining adequacy of the gear tooth design.

⚠ As a precaution it is recommended the machine designer verify the adequacy of the gear based on his own methods of calculation and past experience.

When additional surface endurance and bending strength are required, Kaydon can accommodate both by providing a gear with rounded fillet and selectively hardened flanks and root. See Figure 2-7. On occasion and where the application permits, a gear with only the tooth flanks hardened may be used. This increases tooth surface endurance, but may decrease the tooth bending strength depending on the initial and final configuration being evaluated.

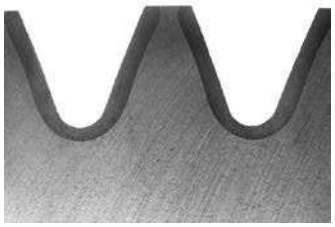

Selective Hardened Flanks and Root

Figure 2-7



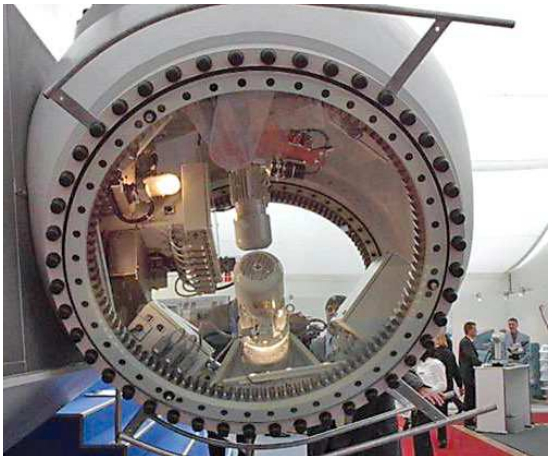





Section 3 - Installation & Maintenance

The following instructions provide essential information for the proper application, installation, and maintenance of Kaydon slewing ring bearings. These instructions are divided into sections according to each of these disciplines and must be performed by qualified personnel.



Failure to adhere to these instructions may significantly impair the slewing ring bearing's ability to provide satisfactory service and may cause premature failure of the bearing as well as endanger safety of any personnel in the vicinity of the equipment.

Technical properties of slewing ring bearings are covered in Sections 2 and 4 of Kaydon Catalog 390.

Kaydon accepts no liability for:



1. Non-compliance to instructions provided in this Installation and Maintenance literature.

2. Failure to pass on content to third party.

Section 3 Contents
Installation & Maintenance

Page Number

Part 1 – Design Considerations (For Equipment Designer) 25

1.1 Mounting Structure
- 1.1.1 Stiffness
- 1.1.2 Interface Features
  - 1.1.2.1 Flatness
  - 1.1.2.2 Pilots
  - 1.1.2.3 Holes
- 1.1.3 Protection
- 1.1.4 Access (For Installation and Maintenance)
- 1.1.5 Attachment
  - 1.1.5.1 Bolts
  - 1.1.5.2 Welding

1.2 Pinion and Gear Mesh
- 1.2.1 Pinion Design Considerations
- 1.2.2 Backlash

1.3 Mounting Examples

Part 2 – Installation and Maintenance (For Equipment Builder) 38

2.1 Handling
2.2 Storage
2.3 Installation
- 2.3.1. Preparation
- 2.3.2 Positioning
- 2.3.3 Securing
- 2.3.4 Gear Backlash and Alignment

2.4 Post Installation
2.5 Maintenance
- 2.5.1 Lubrication
  - 2.5.1.1 Bearing
  - 2.5.1.2 Gear
- 2.5.2 Bolts
- 2.5.3 Seals
- 2.5.4 Cleaning
- 2.5.5 Noise, Roughness, Vibration
- 2.5.6 Torque
- 2.5.7 Tilt (Clearance)
- 2.5.8 Dismantling and Disposal

Part 3 – Maintenance (Guidance for Equipment Owner and/or User) 44

3.1 Before Use
3.2 During Use
3.3 Grease Lubricants Table

Installation & Maintenance

1. Design Considerations (Guidance for the Equipment Designer)

Slewing ring bearings, due to the nature of their design, have low structural stiffness making them highly susceptible to any distortions caused by the surrounding structures. Such distortions cause variations to the precisely designed and manufactured internal geometry of the bearing and will adversely affect performance and life.

1.1 Mounting Structure

Most component designs are a necessary compromise from the ideal to the practical. The design of mounting structures for large multiload bearings is no exception. Regardless, several criteria must be satisfied by the mounting structures, above and below the bearing, in order to obtain maximum bearing life and performance. Among these are stiffness, attachment, precision, accuracy, protection, and access.

The requirement for increased stiffness and higher precision surfaces is more critical under the following conditions:

- Increasing loads
- Increased frequency of operation
- Decreasing diameters
- Decreasing bearing cross sections
- Decreasing internal bearing clearance
- Decreasing torque limits

Protection of the bearing and accessibility for maintenance are critical to ensure bearing performance and longevity.

The following guidelines make reference to the bearing's rolling element diameter (D_w) and raceway diameter (D_p). During initial stages, the designer can use the following approximations. As required, contact Kaydon for the specific bearing assembly drawing for confirmation of the raceway diameter and other important design features.

$$D_w \approx 0.5 \cdot H_{min}$$

$$D_p \approx 0.5 \cdot (L_0 + L_i)$$

Kaydon recommends steel to fabricate any structures used in conjunction with its slewing ring bearings, unless otherwise specified. The actual steel material selected will vary as required by the final structure design and resulting stresses. The use of higher strength steels does not necessarily result in increased stiffness. The choice of material for the structure is the equipment designer's or manufacturer's.

1.1.1 Stiffness

The ideal bearing mounting would be infinitely rigid and isolate the bearing from localized loads and distortion. Recognizing this to be impractical, while still maintaining the original equipment design goals, Kaydon prepared Figures 3-1 to 3-3 (Deflection) showing maximum permissible deflections that typical four-point and eight-point ball bearings can withstand while maintaining correct function. Allowable circumferential deflection (δ_d) around the structure's mounting face is shown in Figure 3-1. There must be no abrupt changes in deflection. The maximum deflection error must be gradual, similar to a sinusodal wave pattern, and not occur in a span less than 90° and not more than once in 180°.

Another consideration is the allowable deflection from a true plane in a radial direction (δ_v), also referred to as dish or perpendicularity. For ball bearing designs this can be determined by using the following equation.

$$\delta_v \approx 0.003 \cdot D_w \cdot P$$

Where P = radial distance of mounting structure face

The maximum circumferential and radial deflection for roller bearing designs is 2/3 of that for the equivalent sized four-point ball bearing.

Reduction of the δ_d and δ_v values may be necessary due to certain application requirements such as lower rotational resistance or higher precision.

⚠ Equipment designs not complying to these requirements will adversely affect bearing performance, imposing concentrated loads on the bearing and adjoining fasteners. Concentration of loads results in higher loads on the rolling elements, raceways, and adjoining fasteners. This will lead to increased rotational resistance, decreased bearing and fastener life and a potentially unsafe working environment.

Installation & Maintenance

Allowable Deflection vs Raceway Diameter

Must not occur within 90° nor more than once in 180° of circumferential travel

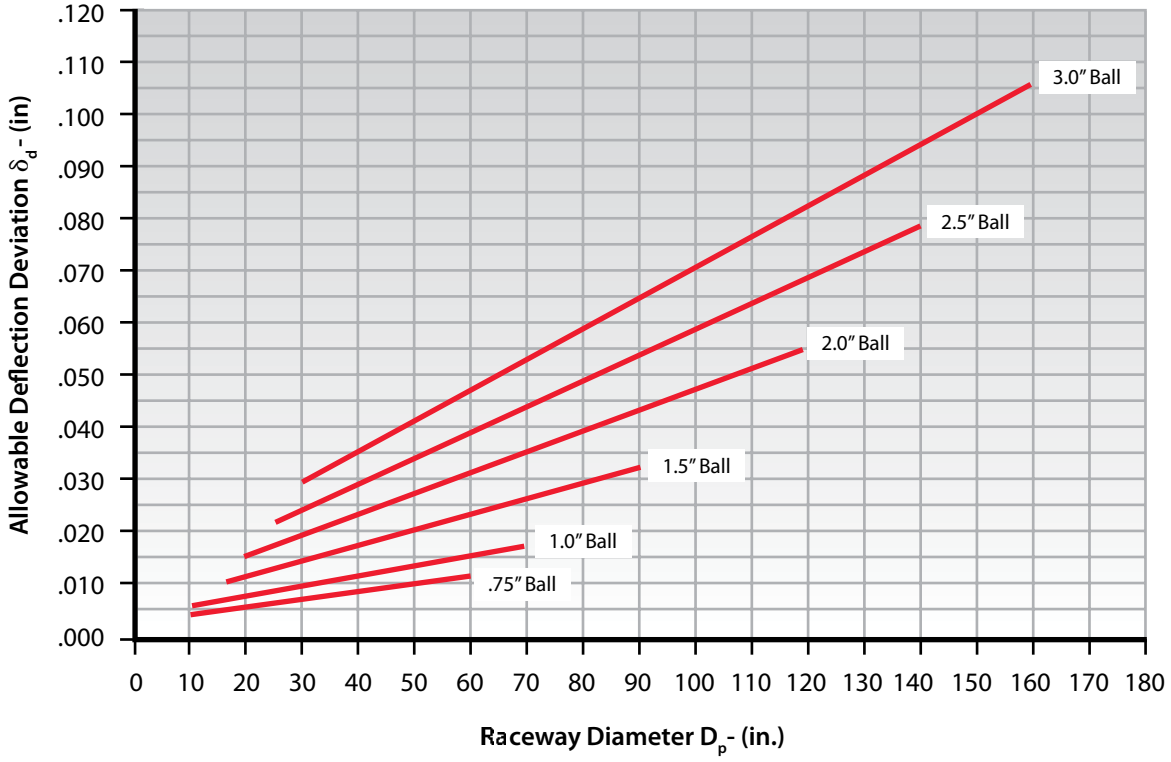

Figure 3-1

Permissible Deviation Rate

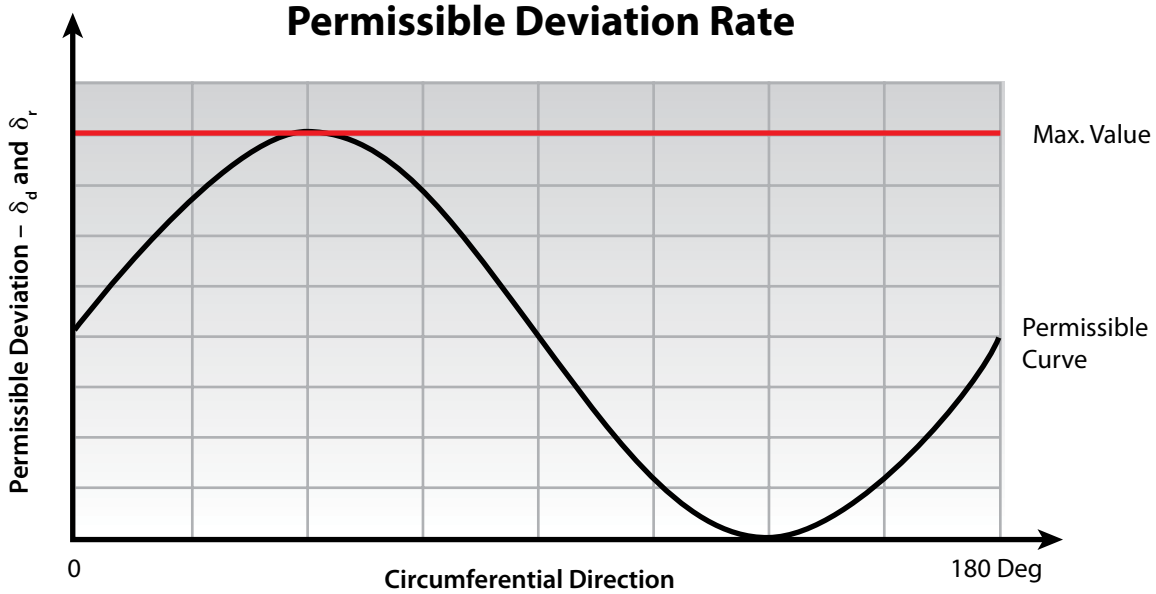

Figure 3-2

Installation & Maintenance

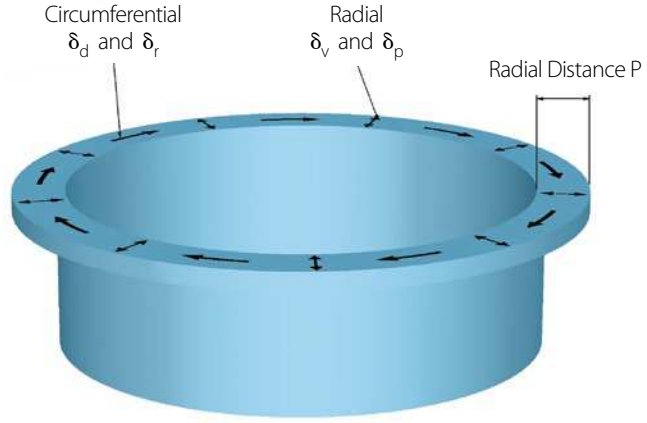

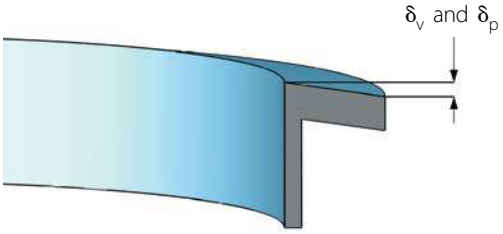

Mounting Structure Deviations

δ_d = circumferential deflection
δ_v = radial deflection
δ_r = circumferential flatness
δ_p = radial dish (perpendicularity)

Figure 3-3

Kaydon offers the following guidelines to assist designers. Failure to follow any of these may cause additional risk and/or premature failure. Therefore, testing of the overall configuration and bearing installation is required to validate the design. Extra caution is required during any testing, as failure of any component could lead to complete separation. This may result in injury or fatality to anyone in close proximity.

- A uniform vertical and tube-shaped structure with a flange on one end should be used, allowing adequate room for fastener installation and maintenance. This structure would be similar to the end of a flanged pipe with a diameter close to that of the bearing's raceway. Refer to Figure 3-5. For initial sizing, wall thickness of such tubing should be at least 1/5 the overall height of the adjacent bearing's ring. Refer to Figure 3-4.
- The mounting or structural plate supporting the bearing should have a finished thickness of 1/2 of the bearing ring height for single-row rolling element bearings and at least 1/3 of the bearing ring height for multi-row bearings. Generally, thinner mounting plates require more structural support and bracing to stiffen the overall design. The final thickness of plate required will vary depending on the overall configuration of the structure and load being applied. Testing, as mentioned above, is recommended.
- The face of the structure that supports the bearing must make contact with the complete mounting face of the bearing's ring and have surface finish 250 AA or better.
- Obtaining a uniform distribution of the load to the bearing is difficult when using a frame, welded structure, and gussets for structural support under the mating plate. Should it be necessary to use such a design, the frame and supporting structure must be oriented to provide as much support as possible directly below the bearing's raceway. Refer to Figures 3-6 and 3-7.
- If the immediate structure supporting the bearing consists of two plates, one welded atop the other, caution must be taken to avoid distortion of the plates during welding as it could result in undetected voids between them. Under load, the plates will deflect causing non-uniform and increased dynamic loads on the bearing and retaining bolts. Refer to Figure 3-8.
- Variation in the physical "grip length" of the bearing's mounting bolts is not permissible in the design of the mounting structure. The physical "grip length" is the distance from the bottom of the bolt head to the first thread of engagement. Such variation imposes a disproportionate amount of load on those having shorter grip length. This can lead to premature failure and/or separation of the assembly.
- Special attention needs to be given to stiffness of the gear drive mounting area. Designs having insufficient rigidity in this area will permit deflection and result in poor gear and pinion mesh alignment. Poor alignment can lead to premature failure of the pinion, gear, and gear drive.

Installation & Maintenance

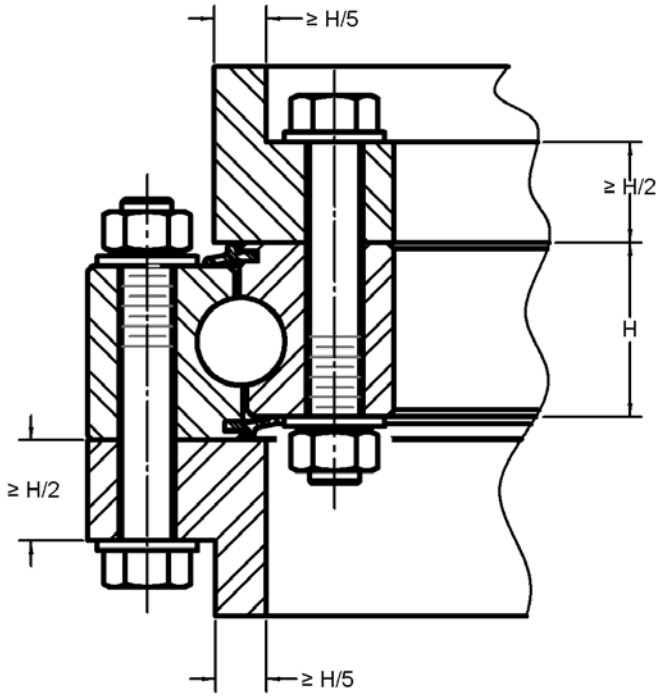

Minimum Mounting Support Requirements

Figure 3-4

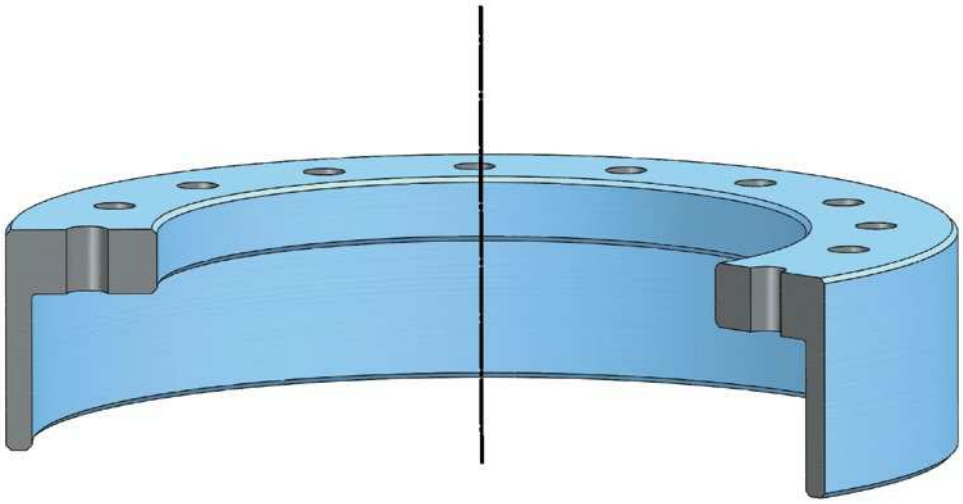

Vertical Tube with Flange for Mounting Support

Figure 3-5

Installation & Maintenance

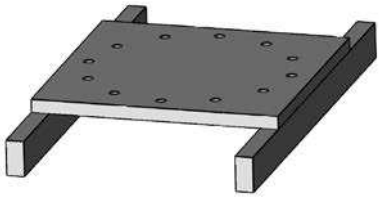

Frame without gussets near mounting holes requires thicker plate.

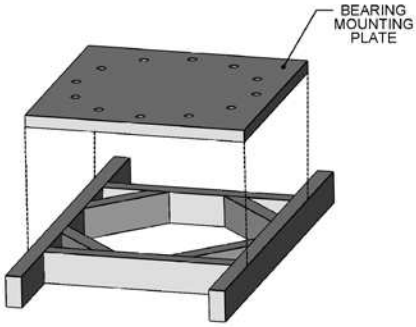

Gussets added near bearing mounting holes increase rigidity.

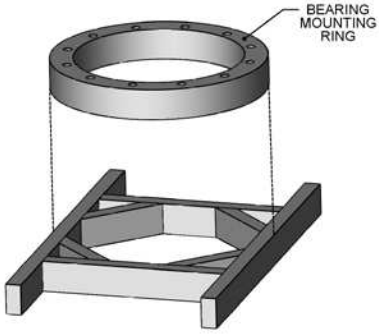

Gussets added near mounting holes and ring replace plate for additional rigidity.

Fabricated Frame & Structure Supports

Figure 3-6

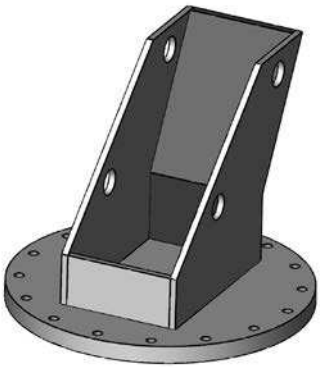

Turnstile without braces lowers side plate and mounting plate rigidity, reducing load distribution around bolt pattern and bearing.

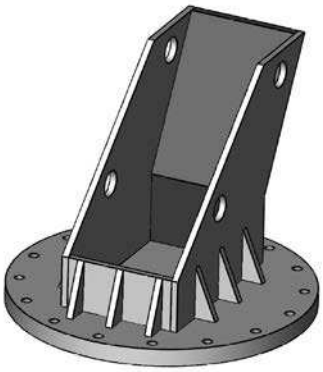

Turnstile with braces increases side plate and mounting plate rigidity and provides increased load distribution around bolt pattern and bearing.

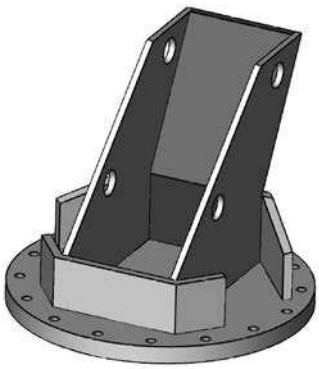

Turnstile with braces located near bolt mounting holes increases side plate and mounting plate rigidity and provides additional load distribution around bolt pattern and bearing.

Fabricated Turnstiles

Figure 3-7

Installation & Maintenance

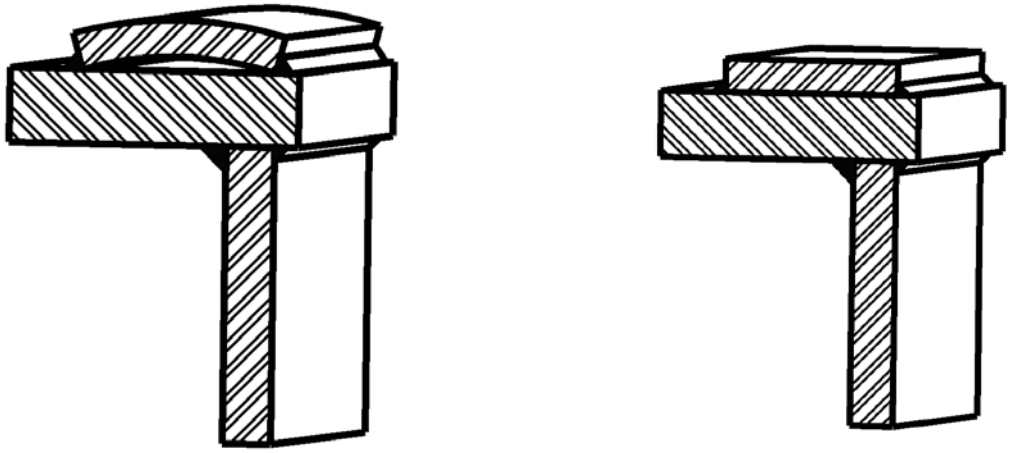

Welded Plates - Potential for Detrimental Distortion

Figure 3-8

1.1.2 Interface Features

1.1.2.1 Flatness

Bearing mounting surfaces must be machined flat after all welding and stress relief treatment on the structures is complete. If subsequent welding is necessary, it must be done to avoid distorting the previously machined mounting surface. The allowable degree of out-of-flatness in the circumferential direction (δ_r) for typical four-point and eight-point ball bearings is shown in Figure 3-9. Out-of-flatness, like distortion, must be gradual, reflecting a sinusodial wave pattern and not occur in a span less than 90° and not more than once in 180°.

In addition to flatness in the circumferential direction, the allowable dish or perpendicularity deviation (δ_p) in the radial direction must be determined. For ball bearing designs, this can be done using the following equation.

$$\delta_p \approx 0.001 \cdot D_w \cdot P$$

Where P = radial distance of mounting structure face

The allowable degree of out-of-flatness for roller bearings is 2/3 the limit for an equivalent-sized four-point ball bearing.

It may be necessary to reduce the δ_r and δ_p values in applications which require low rotational resistance or high precision.

Installation & Maintenance

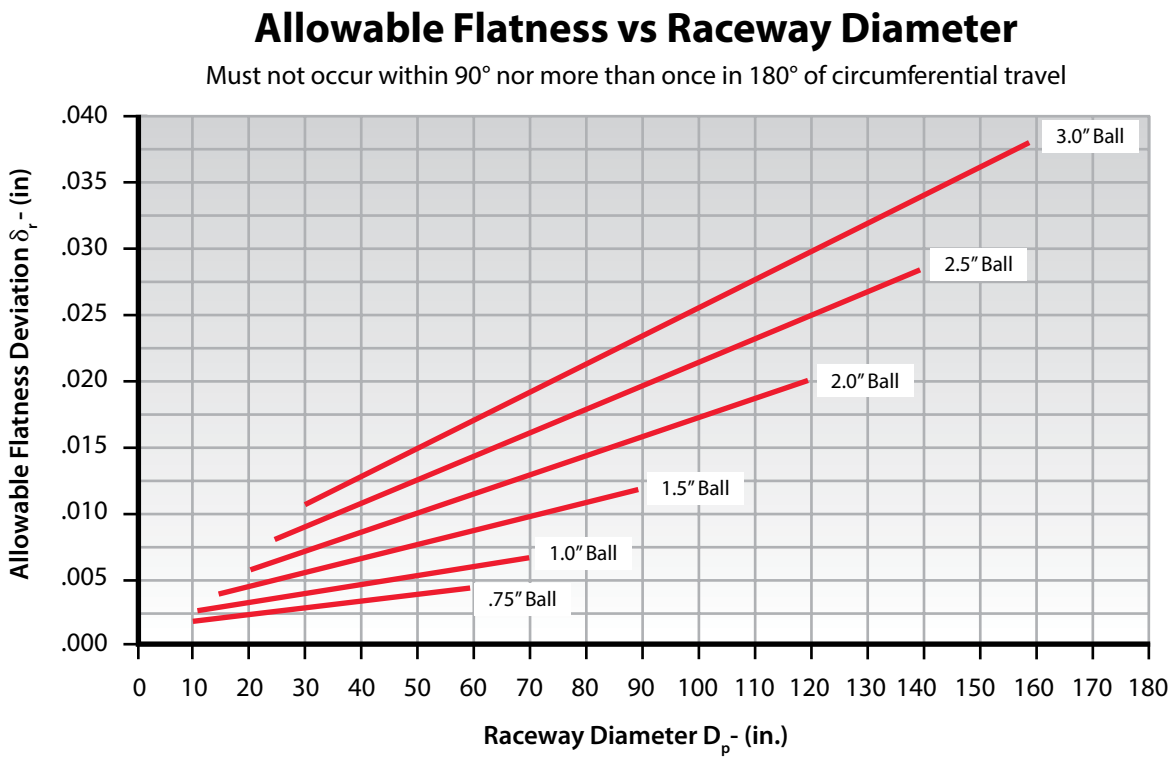

Figure 3-9

⚠ Kaydon does not recommend the use of grout or shims to compensate for excessive out-of-flatness.

1.1.2.2 Pilots

Pilots are sometimes used for accurate location of the bearing or to aid in retention of the bearing. If used, they must be round and accurately sized so that they do not distort the bearing. Consideration must also be given to their eccentricity and positioning tolerance relative to any hole patterns used in the structure and the interfacing bearing ring. Kaydon can provide the applicable bearing assembly drawing which includes interfacing tolerances.

1.1.2.3 Holes

Mounting holes and dowel holes, if any, must be within the true location tolerances required to prevent distortion of the bearing due to interference. Mounting hole location tolerance must account for eccentricity of the hole pattern relative to any pilot diameters. Through holes should be compatible with the location tolerance and of a diameter equivalent to those in the corresponding bearing ring. Kaydon can provide the applicable bearing assembly drawing which includes interface features and tolerances.

Bearings should never be used as drill jigs. They may be used as templates for transfer of hole location provided care is taken not to distort the bearing. Distortion is more likely to occur on bearings having thinner ring sections.

1.1.3 Protection

Kaydon bearings are designed to withstand normal operating environments. If the upper structure does not provide complete cover for the bearing, a separate seal or shield is recommended. Exposed gears should be shrouded if they are to be exposed to extremely dirty conditions. Shields and shrouds should be designed with cover doors, plugs, or other means of access to the bearing for maintenance purposes.

To further enhance protection, Kaydon can provide painting or plating options as required.

Installation & Maintenance

1.1.4 Access (For Installation and Maintenance)

Like all mechanical components on a machine, the bearing must be accessible so that it can be properly maintained. The following must be considered.

⚠ Mounting bolts require periodic checking and possibly retightening. Access to every mounting bolt must be readily available. Failure to properly maintain the mounting bolts may result in failure and injury to anyone in the vicinity.

Lubrication of the gear and internal components is required and convenient access to the gear and bearing grease fittings must be provided. It is recommended that remote lines to the bearing be added to allow rotation as grease is introduced to the raceways.

⚠ There may be rare occasions when it is desirable to inspect the bearing raceways and internal components. This should only be attempted by qualified personnel due to the potential for the bearing and structures to come apart. This can damage components and cause injury or fatality to anyone in the vicinity.

This inspection may be accomplished on typical slewing ring bearings by removal of the loading plug, excluding three-row roller designs.

While removal of the loading plug voids the warranty, it may be necessary. To accommodate access to the retention pin for the loading plug, the designer should include additional clearance or access holes above and below the retaining pin. See Figure 3-10.

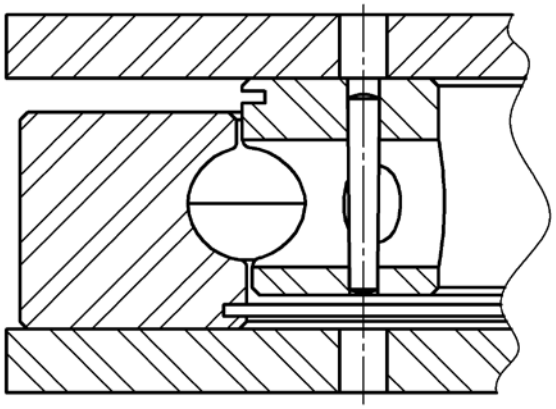

Access holes for loading plug

Figure 3-10

1.1.5 Attachment

The method of attachment of Kaydon bearings to the support structure significantly affects its design. The preferred method is to use bolts in both rings. If you require assistance with applications where the attachment for one ring is to be done by welding, contact Kaydon.

1.1.5.1 Bolts

The preferred bolting arrangement is a full circle of uniformly spaced fasteners going through holes in both bearing races. This benefits both the bearing and the bolts. The bearing races are reinforced by the bolt tension. The resulting greater bolt grip length allows more accurate and uniform pretension, reducing fatique loading. However, it is not always practical to have all the mounting holes spaced exactly equal on all designs, due to interference with supporting structures or brackets. In such cases, the spacing between adjacent bolts may be shifted a few degrees either way to accommodate mounting hardware and assembly. Testing is recommended, as it is the only accurate method for determining bolt loads and validation of the overall joint configuration and assembly procedure.

Installation & Maintenance

⚠ The bolt arrangement, quantity, size, and thread engagement of bolts are the responsibility of the equipment designer and manufacturer for the following reasons:

- There is no universally accepted method of analyzing the forces imposed on the bolts in a slewing ring bearing joint subjected to moment loading.
- The stiffness, uniformity, and final design of the structures to which the bearing is attached have an extremely high degree of influence on the load in the fasteners. Only the equipment designer or manufacturer can control this.
- The quality of the fastening hardware, method of tensioning, hardness of the surfaces under the bolt heads, and the use of thread lubricant are critical factors over which the equipment manufacturer has control.

We suggest that selection of the bolts should be made with the advice and assistance of the fastening hardware supplier, as bolt quality and recommended method of pretensioning and maintenance vary widely. Attention to details such as head/body fillet radius, thread form, finish, surface asperities, and freedom from cracks and other possibly fatal flaws are very important to the safety of the equipment and any personnel in the vicinity. The importance of adequate and uniform pretensioning is evident from the proliferation and technological advancement of devices such as:

- Turn of the nut indicators
- Preload indicating washers
- Torque wrenches with integral "yield" sensors
- Hydraulic bolt stretchers
- Ultrasonic measuring equipment
- To aid the designer in initial sizing, the following formula can be used to calculate the approximate load on the heaviest loaded bolt. This method is based upon past experience and yields results that have proved satisfactory for most applications. It is analogous to the method Kaydon uses to determine the load on the heaviest loaded rolling element within a bearing.

⚠ Kaydon makes no warranty, expressed or implied, regarding the adequacy of the bolts. The only certain way to determine the actual load is by testing, which is strongly recommended.

$$R_b = \frac{12 \cdot M_k \cdot F_f}{L \cdot n} \pm \frac{F_a}{n}$$

$$*F_s = \frac{\text{Bolt Proof Load Rating}}{R_b}$$

M_k = Moment load, (ft - lbs)

F_f = Flexibility factor. Use 3 for bearings and support structures of average stiffness.

F_a = Axial load, (lbs)

If the load is in tension, the sign is +.
If the load is in compression, the sign is –.
Refer to Figures 2-2 and 2-3.

L = Bolt circle diameter, (in)

n = Total number of evenly distributed bolts

R_b = Total load on heaviest loaded bolt, (lbs)

$*F_s$ = Factor of safety of bolts.
Minimum recommended value = 3

Bolt Proof Load

SAE J429, Grade 8 and ASTM A490; Coarse Threaded Series

Bolt Dia. (in)	Proof Load (lbs)
1/2	17,000
5/8	27,100
3/4	40,100
7/8	55,400
1	72,700
1 - 1/8	91,600
1 - 1/4	116,300
1 - 1/2	168,600

Installation & Maintenance

If you determine that alteration to the mounting hole pattern is required for your bearing, Kaydon is available to provide assistance to help you select a mounting hole pattern for the bearing in question.

The following is a list of additional recommendations concerning bolts and their incorporation into the final equipment design. The items listed below are not all inclusive and further study on the subject is recommended. These recommendations are intended to provide the designer with a good basis from which to begin.

- High strength bolts with coarse threads and hexagon heads in accordance with SAE J429, Grade 8 or ASTM A490/A490M or ISO 898-1, Grade 10.9 tensioned to 70% of their yield strength.
- Where applicable, coarse threaded hex head nuts in accordance with SAE J995, Grade 8 or ASTM A563, Grade DH or ISO 898-2, Class 10.
- Hardened round flat steel washers in accordance with ASTM F436 under head of bolt and also nut.
- Use of hardware that identifies the manufacturer as well as proper SAE, ASTM or ISO grade designations.
- The ratio of the joint's clamp length (distance from the bottom of the bolt head to the first thread of engagement) to the nominal bolt diameter should equal 3.5 or greater. This ratio has a significant impact on embedment and the potential for loss of bolt tension and premature failure. A higher ratio is less prone to result in loss of bolt tension Lower ratios may prove unacceptable and require more frequent inspection of the bolts for proper tension. Testing is required for validation.
- Bolts threads should end short of the head by at least a distance equivalent to the body diameter.
- Equal clamp or grip length for all mounting bolts in a given ring.
- The thread engagement length between bolt and mating steel structure should be at least 1.25 times the nominal bolt diameter.
- A bolt should be used in every mounting hole.
- There should be a minimum of 6 free threads (not engaged) in the tensioned portion of the bolt.
- Performance of bench tests is recommended to validate that the method of bolt tensioning achieves the desired results prior to any equipment testing.

High strength socket head bolts (ASTM A574) are not preferred but have been successfully used in slewing ring bearing applications. These high strength bolts have a smaller head diameter which requires less space; however they also have less surface area under the head. This reduced surface area increases the potential for more variation in final bolt tension due to embedding and settling. High strength socket head bolts must be used in conjunction with a hardened washer and nut. The nut should be turned to achieve final bolt tension. If possible, use a hardened washer under the head as well as with the nut, to minimize embedment, settling, and loss of bolt tension that could result in premature bolt failure.

Calibrated tension indicating washers are acceptable.

⚠ Lockwashers are **NOT** recommended, because of potentially significant variations in frictional resistance, embedding, and loss of bolt tension leading to permature failure of the bolt. Additionally, locking compound on the threads, intended to prevent loosening, is **NOT** recommended. As mentioned in the maintenance section, the bolts require frequent inspection for proper tension. The most common method used to fulfill this requirement is measuring torque of the bolt. The use of locking compound can lead to a false conclusion that the bolt has the desired tension. Loss of the proper tension can lead to premature bolt failure, dismounting of the bearing and structure, damage to components, and injury or fatality to anyone in the vicinity.

Installation & Maintenance

1.1.5.2 Welding

Attachment of bearings by welding is not favored and is limited to new applications in unusual situations. If additional assistance is required, we suggest that you contact the Kaydon Engineering Department for these applications.

1.2 Pinion and Gear Mesh

1.2.1 Pinion Design Considerations

If a bearing with an integral gear has been selected, the machine designer should work with a pinion manufacturer to select the appropriate mating pinion. It is important to be aware and consider all potential operating circumstances which could be detrimental to pinion and gear life.

A pinion supported only on one end is often selected for mating with slewing ring bearings. This is commonly referred to as an overhung pinion. Use of this type of arrangement whenever high gear tooth loads exist requires the designer to consider pinion modifications not commonly used with standard gear transmissions. We suggest that the following gear design modifications should be considered when selecting a mating pinion.

- **Addendum modification (profile shift).**

  This is especially important for pinions having fewer than 15 teeth for a Stub Involute tooth form and 19 teeth for a Full Depth Involute tooth form to avoid undercut, weakened tooth design, and to avoid tip or involute interference.

- **Profile and tip relief. Refer to Figures 3-11 & 3-12.**

  Higher dynamic loads, fewer pinion teeth, and support only on one end of the pinion increase potential for deflection of the gear and pinion teeth during operation. These conditions have a tendency to generate wear (scuffing) in the dedendum of the gear tooth, regardless of the teeth having correct profiles and theoretically compatible geometry. Scuffing generates metallic wear particles and weakens the gear tooth. This may prove detrimental to gear and pinion life depending on the operating circumstances.

- **Crowning or changing of the tooth thickness along its width.**

  This is considered a good practice for highly loaded gears as it allows better distribution of the stresses along the tooth face. For situations with over-hung pinion mounting, off-setting the crown should be considered to account for pinion and drive deflections and provide a more even stress distribution. Generally the thickest section along the tooth face is off-centered toward the unsupported end of the pinion.

- **Surface hardening of the pinion.**

  The pinion experiences more operating cycles than the gear teeth. Therefore, it requires a higher surface endurance life. This is accomplished by through hardening or selective hardening. When through hardening, care must be taken to prevent the pinion teeth from becoming too hard and brittle for the intended application and mating gear. Selective hardening of the pinion is an alternative when surface hardness and ductility are major design concerns. A hardness pattern that ends in the fillet area has significantly less strength than one that flows completely around the fillet and up both flanks. The heat treat methods to accomplish this include carburizing, nitriding, or induction hardening. In all cases, evaluation of the hardness pattern, including the transition area, is necessary to determine if it is appropriate for the intended use.

- **Quality**

  The pinion quality should be equivalent to or better than that of the mating gear.

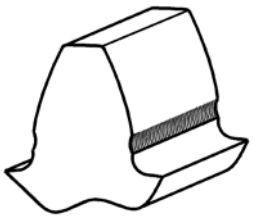

Scuffing on Dedendum

Figure 3-11

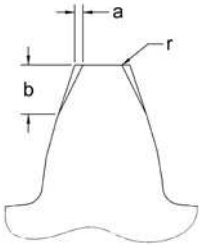

Flank Tip and Profile Relief

Figure 3-12

Installation & Maintenance

1.2.2 Backlash

Backlash is required for most geared slewing ring bearing applications. This is to accommodate manufacturing tolerances of the gears, mounting structures, lubrication, thermal expansion, and deflection of the components under dynamic loading. Refer to Figure 3-13.

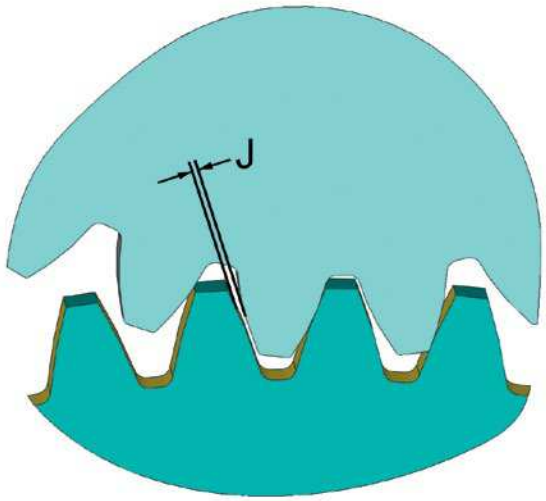

Gear Assembly Backlash

Figure 3-13

In high ratio gearing, the larger of the two mating gears usually has its teeth thinned to accommodate this, and the smaller one is kept at nominal to maximize its tooth strength. The amount of tooth thinning, or backlash allowance, is shown on Kaydon's drawings, which may be obtained by contacting Kaydon. Typical backlash ranges are shown in Table 3-14. For module gears, use the approximate equivalent gear pitch diameter and diametral pitch as shown in the table.

The backlash should be measured just inside each end of the pinion and gear mesh to verify that proper alignment is obtained. Poor alignment can result in premature tooth wear and breakage. Consider any crowning of the pinion teeth when evaluating the alignment.

$$m = \frac{25.4}{P_d} = \text{module}$$

The designer or manufacturer needs to determine whether to use a fixed or adjustable center distance. Factors that influence this decision are skill level of assemblers, installation time, maintenance, and economics. The designer must also weigh potential for increased gear life versus additional cost incurred by requiring more stringent manufacturing tolerances or designing for an adjustable center distance.

Table 3-14

Gear Pitch Dia, D_2 (in.)	Minimum Backlash, J (in.)	Maximum Backlash (in.)				
		Diametral Pitch (P_d)				
		1.5	1.75	2	2.5	3, 4, 5
20	0.014	0.029	0.027	0.025	0.023	0.022
30	0.015	0.030	0.028	0.026	0.024	0.023
40	0.016	0.031	0.029	0.027	0.025	0.024
60	0.018	0.033	0.031	0.029	0.027	0.026
80	0.020	0.035	0.033	0.031	0.029	0.028
100	0.022	0.037	0.035	0.033	0.031	0.030
120	0.024	0.039	0.037	0.035	0.033	0.032

Please see Section 3 of website version of catalog for pending additions to this table.

Installation & Maintenance

1.3 Mounting Examples

Kaydon bearings can be designed to suit a number of mounting arrangements. Following are illustrations of some basic arrangements. These can be varied to suit the requirements of a specific application. Such variations include types of holes, location and number of lube holes, omission of integral gears, and incorporation of special seals.

The mounting structures shown are intended to be illustrative only. Important details in design such as mounting plate thickness, location and number of stiffening members, and bolt lengths must be determined by the equipment designer as detailed in previous sections.

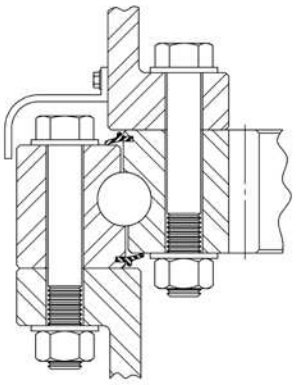

Figure 3-15

Pinion is attached to stationary outer race support and rotates the upper structure supported by the inner race. A shroud over the outer seal and bolts prevents contamination under extreme conditions.

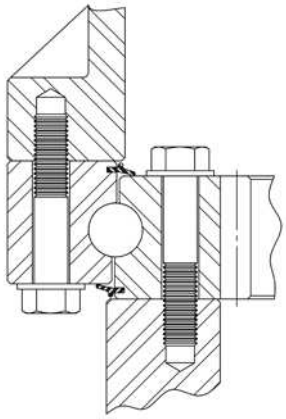

Figure 3-17

Pinion is attached to rotating upper structure carried by outer race. Location of gear on inner ring provides protection from harsh external conditions.

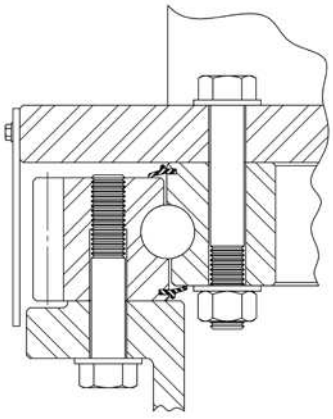

Figure 3-16

Inner race supports the rotating upper structure with pinion. An external shroud protects the gear teeth on the stationary outer race.

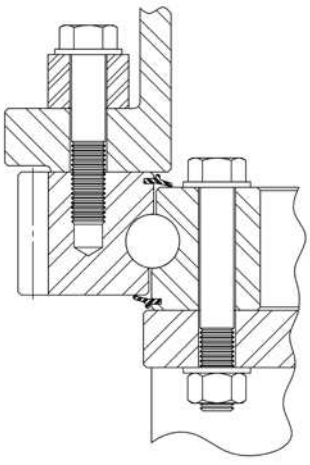

Figure 3-18

Pinion is attached to stationary inner race and rotates geared outer race carrying upper structure.

Installation & Maintenance

2. Installation and Maintenance Considerations (Guidance for the Equipment Builder)

2.1 Handling

Slewing ring bearings, like any other machine part, require careful handling. Use of safe operating practices and observation of all relevant legal regulations when handling, cleaning, and transporting are required. It is recommended that gloves be used whenever handling the bearing.

Transport the bearings only in the horizontal position, preferably safely secured to shipping pallets or in a container. When lifting a bearing, use eye bolts in the mounting holes or nonmetallic slings at three evenly distributed points around the bearing. Avoid any sudden acceleration or impact. If the bearing must be turned over, use nylon web slings or equivalent. Do not use chains or metallic mesh slings in contact with the bearing.

2.2 Storage

Kaydon slewing ring bearings are packed with general purpose grease at the factory, unless specified by the customer, and are sealed to exclude ordinary foreign matter. Keep the bearing packaged as originally received and in a horizontal position until all preparations have been made for its installation. If it is necessary to stack the bearings, then a stable intermediate layer with adequate strength to support the weight must be used between bearings. The overall stacked height must not exceed three feet. We recommend that you do not stack more than two high if the bearing is four feet or larger in diameter.

Outdoor storage is not recommended. If the bearing is not installed within one year of receiving it, the grease should be purged and replaced with fresh grease. External surfaces of slewing ring bearings, including the gear, are coated with a preservative oil to provide nominal protection during storage.

We suggest that you advise Kaydon if extended periods of storage are anticipated so that the bearings can be packaged appropriately.

2.3 Installation

It is important to recognize the vital role of the bearing/gear and the means for securing it to the equipment, whether it be with bolts or welds.

Detailed and clear instructions need to be prepared for the installer. When bolts are used as the means of attachment, tests need to be conducted to validate that the method of bolt pretensioning achieves the desired results. Confirm the bolts have the proper quality standard and manufacturer identification as prescribed by the designer.

If the bearing is to be attached by welding, conduct the necessary tests to prove that the specified joint will be strong enough to safely attach to the bearing.

Examine for and remove weld spatters, nicks, and burrs. If surfaces have been painted, remove the paint completely.

2.3.1 Preparation

Installation of the bearing and gear assembly should be done in a clean, dry, well-lit area. Mounting surfaces and pilots of the housings should be machined and wiped clean of paint, chips, dirt, and lint. Even "soft" material trapped between the mounting and bearing surfaces can result in high spots and affect bearing and bolt performance. When this has been done, examine for and remove weld spatter, paint, nicks and burrs and wipe clean again. The mounting faces need to be machined and in accordance with the limits prescribed in Part 1, Paragraph 1.1.2

⚠ Confirm that the bearing and all necessary and correct hardware are on-site before beginning the installation. Verify the bolts and mounting hardware are of the size, design, finish and quality specified by the designer. The bolts must have proper identification for the quality standard required. Using bolts that are not in conformance with those prescribed can lead to unsatisfactory bearing performance, premature failure, and a potentially fatal working environment . Refer to Part 1, Paragraph 1.1.5.1

Installation & Maintenance

2.3.2 Positioning

If one ring has a pilot or dowel hole, it should be positioned and mounted first.

Consider alignment of gear's minimum backlash on structure so any necessary adjustments can be made.

Identify zones of maximum load on supporting structures to which the bearing will be secured. When in doubt, consult with the equipment designer for their instructions.

Examine and identify any damage to packaging prior to unwrapping the bearing; then it should be wiped clean and inspected.

⚠ Do not expose the seal area or any other bearing opening to pressurized cleaning.

Use only cleaning material that is compatible with the seal material and avoid getting debris or other material into the bearing. Visually inspect and confirm that there is no damage to the bearing, gear, seals, or grease fittings.

Remove any minor burrs from mounting surfaces that may have occurred in shipping or handling. Use a hand file, taking care to remove only as much material as necessary to ensure full contact of bearing surface with equipment mounting surface. Make sure all surfaces are wiped clean.

⚠ We recommend that the bearing not be disassembled without express approval of and instruction from Kaydon. Removal of the loading hole plug voids the warranty.

Lift or hoist the bearing into position, placing intended ring down on its supporting structure.

Align the mounting holes and orient the ring so the load plug and/or hardening gap location (identified by a "G") is 90° from the most heavily loaded zone.

Confirm the grease fittings or holes are located for easy access, or aligned with lubrication lines.

Using a gauge, verify the bearing is fully supported by the mounting structure. If not, then determine cause and correct.

2.3.3 Securing

For good load distribution and smooth, low torque operation, the bearing should be as round as possible when the bolts are tightened. The following procedure is provided as an aid in achieving that objective.

Install washers, nuts, and hand tighten bolts in the supported ring according to the instructions from designer. Make sure there is no interference or rubbing of the bolts in any of the holes. Do not distort the bearing in order to insert any bolts. Interference can cause inaccurate results and lead to premature failure of bearing and bolts.

Apply a moderate centered thrust load to the bearing and note the torque required to rotate the bearing.

⚠ Tighten all bolts in accordance with the equipment designer's instructions. Failure to follow the equipment designer's instructions could result in premature wear or catastrophic failure of the bearing and result in damage to equipment, personal injury, or death.

A common method is the use of star pattern tightening following the sequence below. This is usually done in 3 steps at approximately 30%, 80%, and 100% of the final torque or tension level prescribed by the equipment designer.

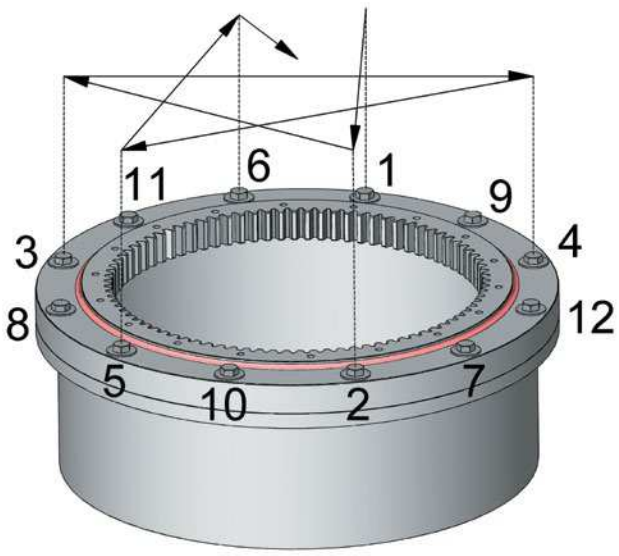

Figure 3-19

Installation & Maintenance

Rotate the unsecured bearing ring several times after each step, checking for tight spots or a significant increase in torque over that initially noted. Either of these indicates the bearing is distorted. Determine and correct the cause.

Remove the centered thrust load previously applied to the bearing and prior to securing the other ring.

Position the other bearing support structure on the unsecured bearing ring.

This support structure should have minimal number of components attached, to keep weight and moment load low so the bolt tensioning operation is not adversely affected.

Align mounting holes and orient the ring so the load plug and/or hardening gap location (identified by a "G") is 90° from the most heavily loaded zone.

Using a gauge, verify the bearing fully supports the mating structure. If not, then determine cause and correct.

Insert and tighten bolts in second ring as done for secured ring. Continue to rotate and check bearing for tight or excessive torque during this operation.

Complete installation of all rotating components of significant weight, and check bearing for freedom of rotation. Excessive torque level, variation, or vibration is indicative of some unsatisfactory installation condition or component.

As permitted, inspect seals again for any damage.

2.3.4 Gear Backlash and Alignment

After mounting the bearing, mount the mating pinion. Check backlash of the gears. Pinions on adjustable centers should be set for proper backlash. Do this at point of minimum backlash on the gear, identified with yellow paint in the tooth space, and at both ends to confirm prescribed alignment exists. If either of these is not as prescribed by the designer, determine and correct the cause. Refer to Figure 3-20.

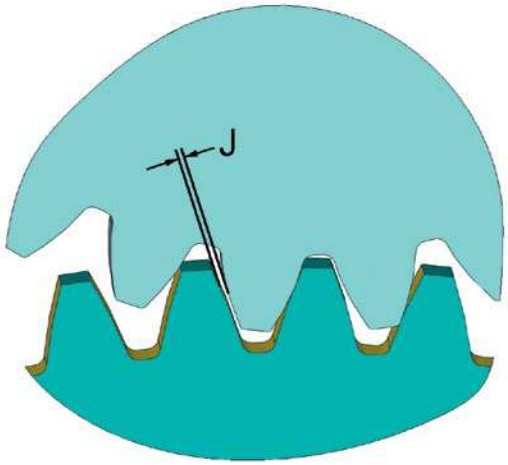

Gear Backlash

Figure 3-20

2.4 Post Installation

⚠ When the equipment has been completely assembled, and prior to testing, check bolt tension to ensure that it is in compliance with that specified by the designer. The equipment should be oriented to generate as little moment or radial load on the bearing as possible to avoid inaccuracy in readings. Document this orientation so it may be used for all future bolt inspections. Any loss of pretensioning must be determined and eliminated.

Measure and record initial bearing tilt (clearance) of equipment following guideline provided in Paragraph 2.5.7.

During and after validation testing, check bolt tension with equipment orientation as previously done and documented. Any loss of pretensioning must be determined and eliminated.

Follow Paragraph 2.5.1 for lubrication intervals of bearing and gear during testing.

Relubricate the bearing and gear prior to delivery of the machine. Introduce fresh grease into the bearing until grease is observed coming from under either seal. Rotate the bearing several times to ensure a complete fill. Repeat every 6 months on idle equipment or as recommended by the equipment designer.

Installation & Maintenance

2.5 Maintenance

While Kaydon slewing ring bearings require minimal attention, what little they are given will pay big dividends in long life, high performance, and trouble-free service.

2.5.1 Lubrication

2.5.1.1 Bearing

Lubrication of the bearing is recommended every 100 operating hours for relatively slow rotating or oscillating applications such as backhoes, excavators, and cranes or as specified by the designer. In more rapidly moving or continuously rotating machinery such as trenchers, borers, and material distributors, the bearing should be lubricated every day, or every 8 hours of round-the-clock service. Refer to Section 3, page 44 for futher discussion on lubricants to use.

Idle equipment should not be neglected. Grease dries out and "breathing," due to temperature changes, can cause condensation within the bearing. Whether used or not, the bearing should have grease introduced every 6 months. The bearing should then be rotated a few revolutions to coat all surfaces with fresh grease.

2.5.1.2 Gear

There is a tendency to take much better care of the bearing than the gear. However, the meshing action and usual position of the gear tends to purge the lubricant; thus, the gear should be regreased frequently with a small amount of lubricant. A well-maintained gear will provide long, smooth, and quiet service. It is recommended that grease be introduced at the point of mesh of pinion and gear every 8 hours of slow or intermittent operation, and more often for rapidly or continuously rotating applications. Refer to Section 3, page 44 for further discussion on lubricants to use.

2.5.2 Bolts

⚠ The cyclic nature of loading on the mounting bolts gives rise to the possibility of their working loose or to inelastic deformation of the threads and other stressed surfaces. With the equipment in the same orientation as the initial testing during installation, the bolts should be checked by the end user within the first 200 to 300 operating hours. Should any loss of pretension be detected, the source must be determined and eliminated. The bolts should be checked again after each additional 200 to 300 hours of operation until loss is no longer detected, at which time the inspection frequency can be extended as specified by the designer.

2.5.3 Seals

Seals should be inspected during routine maintenance as recommended by the designer, but the interval should not exceed 6 months. Check for tears, breaks, or other signs of damage. Depending on the lubrication frequency and protection, it may be necessary to clean some areas to conduct this inspection. Carefully remove any buildup of debris around the seal and lubricate the bearing. There should be a small bead of grease around the seal edge indicating the bearing is receiving sufficient lubrication.

2.5.4 Cleaning

Cleaning should be done with material compatible with seals following all manufacturers' instructions for use, storage, and disposal. Take precautionary safety measures and use safe operating practices, observing all relevant legal regulations when handling.

Do not expose the seal area or any other bearing opening to pressurized cleaning.

2.5.5 Noise, Roughness and Vibration

⚠ Continued monitoring of equipment noise, roughness, and vibration during operation can assist in early detection of poor or unsafe components, structural failure, or poor bearing performance. The operator should be very familiar with the typical operating conditions generated by the equipment. Investigate and resolve any noted changes.

2.5.6 Torque

Monitoring rotational torque and any variation can not only be used to determine a bearing's condition, but can also provide early indication to a gear, joint, or other structural problem. To determine any change in torque, it is first

Installation & Maintenance

necessary to record an initial measurement best done after testing and prior to the equipment going into service. Check torque every 700 hours of operation or every 12 months, whichever occurs first, and resolve the cause for any changes.

2.5.7 Tilt (Clearance)

Internal bearing clearance will increase with raceway and rolling element wear. The rate of wear, along with other key bearing performance criteria will enable the end user to monitor and determine the condition of the bearing and anticipate when replacement is required. A measurement of the bearing's axial movement (tilt) is a reliable indicator of the bearing's internal clearance.

⚠ To determine the amount of wear that has occurred, it is necessary to perform an initial tilt measurement before the equipment is put into service. Continued measurement of tilt, following the same documented procedure, is required to assist the equipment user in determining when a bearing requires removal. Tilt measurements should be taken every 700 hours of operation or every 12 months, whichever occurs first. Whenever the "increase in tilt" reaches 75% of that shown in Table 3-22, reduce the frequency of measurement to 300 hours. As the rate of wear increases, the period between measurements should decrease accordingly.

The following information is an outline for determining a bearing's tilt.

In order to perform the tilt measurement it is necessary to subject the bearing to a complete moment load reversal removing all clearance from "one side" but not exceeding 25% of maximum equipment rating. Contact Kaydon to discuss any alternative inspections.

- Orient the equipment so the bearing is subject to a moment load.
- Permanently mark the point where the dial indicator is to be positioned for measurement on the rotating and stationary structure. This should be in line with the main load or moment load.
- Without rotation of equipment, permanently mark three additional points on the stationary structure where future measurements will be taken. These should be at locations resulting in four total points all spaced 90° apart.
- Attach a dial indicator at the initial point to an exposed diameter of one ring, or as close as possible, so that it will record relative axial movement between the bearing rings. Accuracy of the dial indicator must be 0.001" or finer. Refer to Figure 3-21.
- Set the dial indicator to zero.
- Prepare to note movement and final reading of indicator during following step.
- Without rotating the bearing ring, apply force on the rotating structure and components in a manner so it causes a complete reversal of the moment load on the bearing.
- Record the final dial indicator reading.
- Remove the recently applied force permitting the original moment load to exist on the bearing.
- The dial indicator should return to zero. If it does not, identify and correct the cause.
- Remove the dial indicator and align the permanent mark on the rotating structure with one of the three marks previously put on the stationary structure.
- Use the same procedure to record measurements at this and the remaining two locations.
- Record these readings in a service manual or other secure document for future reference.
- Compare individual readings to the initial measurements recorded at the same relative location. The increase in tilt is the maximum difference observed.

Installation & Maintenance

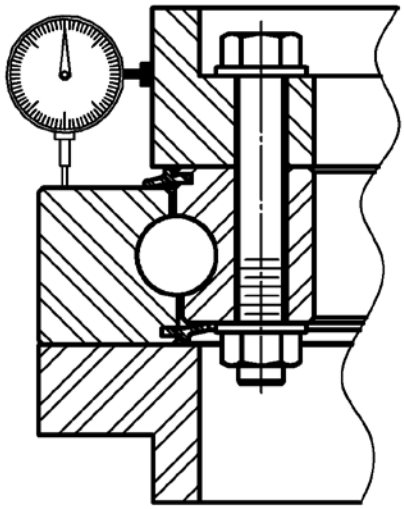

Tilt Measurement Position

Figure 3-21

The increase in tilt is the difference in the last reading taken and the initial reading taken prior to the equipment beginning service. The maximum permissible increase in tilt is shown in Table 3-22 according to rolling element type and diameter. Replace the bearing when the difference exceeds the values shown in Table 3-22. Contact Kaydon should there be additional questions.

2.5.8 Dismantling and Disposal

⚠ Should it be necessary to remove the bearing from the equipment, proceed in reverse order of that used for installation or as close as safely possible.

Contact a Kaydon representative concerning potential for repair or replacement. Disposal shall be in accordance with environmental and other local regulations applicable to the materials used.

TABLE 3-22

ALLOWABLE TILT INCREASE (in)		
Rolling Element		
Diameter D_w	Style	
	Ball	Roller
(in)	(in)	(in)
0.625	0.030	0.010
0.750	0.035	0.012
0.875	0.040	0.013
1.000	0.045	0.016
1.125	0.050	0.018
1.250	0.055	0.020
1.375	0.060	0.022
1.500	0.065	0.024
1.750	0.075	0.028
2.000	0.080	0.032
2.250	0.090	0.036
2.500	0.100	0.040
2.750	0.110	—
3.000	0.115	—

Where D_w = Diameter of rolling element (refer to Page 25 to calculate D_w)

Installation & Maintenance

3. Maintenance (Guidance for Equipment Owner and/or User)

Slewing ring bearings require routine maintenance to ensure optimum performance and that the life determined by the equipment designer is achieved. It is important to follow the service and maintenance recommendations contained in the equipment manufacturer's instruction manual.

3.1 Before Use

If there is no assurance that the bearing/gear has been lubricated within the past six months or after 100 hours of operation, introduce fresh grease according to the equipment manufacturer's instruction manual.

3.2 During Use

- Relubricate bearing and gear according to directions in the equipment manufacturer's instructions.
- Inspect seals, making certain that they are in proper position in grooves and intact.
- Verify tension of all mounting bolts is in accordance with Owner's Manual.
- Be alert to changes in torque, unusual sounds, and/or vibrations.

3.3 Grease Lubricants For Slewing Ring / Slewing Ring Bearings and Their Open Gears

Selection of the lubricants used in a slewing ring bearing and the integral open gear is dependent on the application. The designer of the equipment is responsible for selecting an appropriate lubricant and should consult a tribologist for assistance in selecting lubricants for use in the design.

Some of the more commonly used lubricants are shown in table below. These have been used in Kaydon slewing ring bearings when operated in NORMAL applications. Refer to Section 2 of this catalog for further explanation. The list contains commercially available greases from major lubricant manufacturers. The lubricant properties such as oil viscosity, extreme pressure additives, resistance to water washout, low water absorption, corrosion inhibition, and oxidation resistance found in this list of greases provides an example of some of the properties readily available in the market.

Kaydon slewing ring bearings are pre-lubricated with a lithium-based mineral oil grease conforming to NLGI No. 1 consistency with extreme pressure additives, unless specifically noted. Any grease inserted into the bearing must be compatible with this grease. Please refer to Section 3 of this catalog for suggested lubrication procedure and frequencies along with other valuable information concerning installation, care, and maintenance.

Table of Appropriate Grease Lubricants for Kaydon Slewing Ring Bearings and their Open Gears

Manufacturer	Internal Bearing Grease	Open Gear Grease
BP	Energrease LS-EP 1	------
Castrol	HD Lithium 1	Open Gear 800
Chevron	Dura-Lith EP 1	Chevron Open Gear Grease
ExxonMobil	Mobilux EP 1	Mobiltac 375NC (drum) Gearlube 375NC (spray can)
Klüber	Klüberplex BEM 41-141	Klüberplex AG 11-462
Lubricants USA (FINA)	Marson EPL 1	Marson Open Gear Lubricant
Shell	Alvania EP 1	Malleus GL
Texaco	Multifak EP 1	Crater 2X (asphaltic based)

Section 4 Contents
Bearing Tables & Ratings

	Page Number
Glossary	46
RK Series Four-Point Contact	47-51
HS Series Four-Point Contact	52-56
HT Series Four-Point Contact	57-61
MT Series Four-Point Contact	63-69
Pinions for RK, HS & MT Series	70
KH Series Four-Point Contact	71-74
XT Series Four-Point Contact	75-84
DT Series Eight-Point Contact	85-94
XR Series Cross Roller	95-101
TR Series Three-Row Roller	103-112

Glossary of Abbreviations & Symbols Used in This Guide

BEARING AND GEAR DIMENSIONS		
SYMBOL	FEATURE	UNITS
α	Pressure angle of gear teeth	°
b_2	Face width of gear teeth	in
B_i	Size of hole in inner ring	in
B_o	Size of hole in outer ring	in
D_2	Pitch diameter of gear	in
d_i	Inside diameter of inner ring	in
D_i	Internal diameter on outer ring	in
D_o	Outside diameter of outer ring	in
d_o	External diameter on inner ring	in
D_p	Diameter of bearing raceway	in
d_r	Internal diameter on inner ring	in
D_r	External diameter on outer ring	in
D_w	Diameter of rolling element	in
FD	Full depth involute spur gear (ref. ANSI B6.1-1968, R1974 or ISO 53:1998)	-
FS	Fellows stub involute spur gear (ref. Machinery's Handbook, 18th Edition)	-
H	Height of overall bearing assembly	in
H_i	Height of inner ring	in
H_o	Height of outer ring	in
L_i	Bolt circle in inner ring	in
L_o	Bolt circle in outer ring	in
m	Module of gear teeth = 25.4/Pd	mm
n_f	Number of lubrication nipples/fittings per plane	-
n_i	Number holes in inner ring	-
n_o	Number holes in outer ring	-
P_d	Diametral pitch	-
SD	Stub involute spur gear (ref. ASA B6.1-1932)	-
x_2	Addendum modification coefficient of gear teeth, ("+" sign increases tooth thickness at D2 and "-" sign decreases tooth thickness at D2)	-
z_2	Number of gear teeth	-

BEARING AND GEAR PROPERTIES		
SYMBOL	FEATURE	UNITS
C_{rm}	Moment load rating	ft-lbs
F_z	Maximum allowable gear tooth load	lbs
G	Weight of bearing assembly	lbs
M_w	Friction torque of bearing, installed and subjected to loads	ft-lbs

PINION DIMENSIONS		
SYMBOL	FEATURE	UNITS
b_1	Face width	in
D_1	Pitch diameter	in
D_{i1}	Stock bore	in
D_{o1}	Outside diameter	in
D_{r1}	Diameter of hub	in
L_1	Length of pinion	in
P_d	Diametral pitch	-
w	Square key size, nominal	in
x_1	Addendum modification coefficient	-
z_1	Number of teeth	-

APPLICATION DATA		
SYMBOL	FEATURE	UNITS
f_a	Application Service Factor	-
F_a	Force parallel to bearing axis of rotation	lbs
F_r	Force perpendicular to bearing axis of rotation	lbs
M_k	Tilting moment about bearing centerline	ft-lbs
N	Rotational speed	rpm
μ	Friction coefficient	-

MISCELLANEOUS		
SYMBOL	FEATURE	UNITS
ft	Linear unit of measurement	foot
ft-lbs	Units of torque or moment	foot - pounds
in	Linear unit of measurement	inch
lbs	Units of force or weight	pounds
mm	Linear unit of measurement (SI)	millimeter
⚠	Warning	-

REFERENCES	
AGMA	American Gear Manufacturers Association
ANSI	American National Standards Institute
ASTM	American Society for Testing and Materials
DIN	Deutsches Institut für Normung
ISO	International Standards Organization
NLGI	National Lubricating Grease Institute
SAE	Society of Automotive Engineers

RK Series

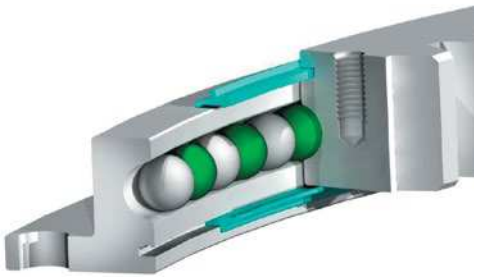

Introduction

RK Series bearings have a flanged cross-section on one or both rings and range in size from 20 – 47 inches OD (500 – 1200 mm). The flanged design reduces weight and provides the equipment designer greater flexibility for configuration of adjacent mounting structures and bolting arrangements. RK Series bearings are well suited for many applications where a large diameter and lighter weight are predominant factors in selection of a bearing.

Design Features

The internal configuration is a deep-groove gothic arch raceway, which provides four points of contact with the balls, enabling the bearing to simultaneously carry radial, axial, and moment loads. The use of spacer balls alternated with load balls allows for lower rotational torque and superior performance in applications involving oscillatory movement. Integral face-riding seals are provided to assist in the exclusion of contaminants.

RK Series bearings are offered in non-geared, internally geared, and externally geared configurations for maximum design flexibility. The gears are Involute Stub designs with 20° pressure angles, manufactured to AGMA Class Q5 quality and .005 to .015 inches allowance for backlash.

All models feature four fittings for lubrication, spaced 90 degrees apart. On non-geared and internal geared models, they are located on the outer counterbore diameter (D_r). On external geared models, they are located on the inner counterbore diameter (d_r).

Availability

RK Series bearings are generally available from stock, and mating pinions for the geared versions are also generally available. See page 70 for mating pinions.

Applications

RK Series bearings have been used successfully in a variety of light to medium duty applications including:

- Small cranes, booms, and lifts
- Industrial positioners and rotary tables
- Chute swivels
- Stretch wrapping machines
- Bottle filling machines
- Conveyors and related material handling equipment
- Rotating displays

RK Series

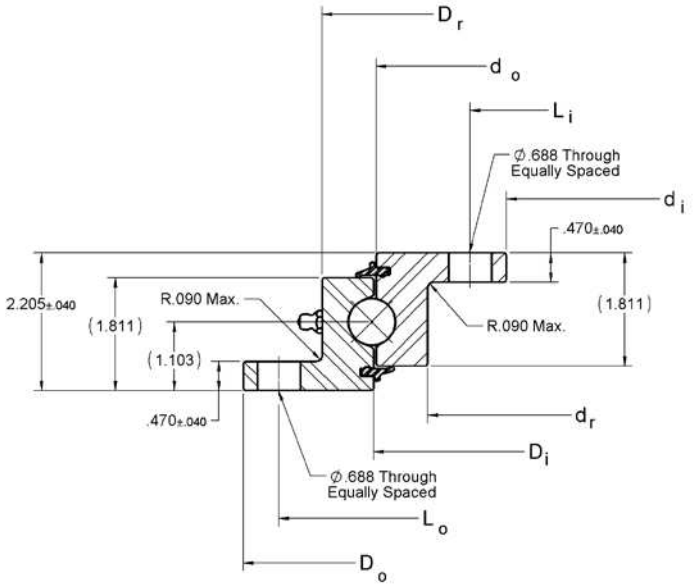

No Gear

Kaydon P/N	OUTLINE DIMENSIONS AND WEIGHT						
	D_o (in)	d_i (in)	D_r (in)	D_i (in)	d_o (in)	d_r (in)	G APPROX. (lbs)
RK6-16P1Z	20.390	11.970	17.870	16.220	16.140	14.490	58
RK6-22P1Z	25.510	17.090	22.990	21.340	21.260	19.610	76
RK6-25P1Z	29.450	21.030	26.930	25.280	25.200	23.550	89
RK6-29P1Z	33.390	24.970	30.870	29.220	29.140	27.490	104
RK6-33P1Z	37.320	28.900	34.800	33.150	33.070	31.420	118
RK6-37P1Z	41.260	32.840	38.740	37.090	37.010	35.360	132
RK6-43P1Z	47.170	38.750	44.650	43.000	42.920	41.270	153
Tolerances	±.040	±.040	+.000 -.080	Ref.	Ref.	+.080 -.000	

Kaydon P/N	MOUNTING HOLES				GEAR DATA INV. STUB, $\alpha = 20°$				MOMENT RATING C_{rm}
	OUTER RING		INNER RING						
	L_o (in)	n_o	L_i (in)	n_i	D_2 (in)	P_d	z_2	F_Z (lbs)	(ft-lbs)
RK6-16P1Z	19.250	8	13.130	12	—	—	—	—	22,700
RK6-22P1Z	24.380	12	18.130	15	—	—	—	—	37,700
RK6-25P1Z	28.380	12	22.130	18	—	—	—	—	49,800
RK6-29P1Z	32.250	15	26.130	18	—	—	—	—	54,200
RK6-33P1Z	36.250	18	30.000	18	—	—	—	—	56,500
RK6-37P1Z	40.130	18	34.000	20	—	—	—	—	65,200
RK6-43P1Z	46.000	18	39.880	24	—	—	—	—	75,500

Not quite what you need? Contact Kaydon to inquire about custom features such as different mounting holes, internal clearance, pilot diameters, drive arrangements, or Endurakote® plating.

RK Series

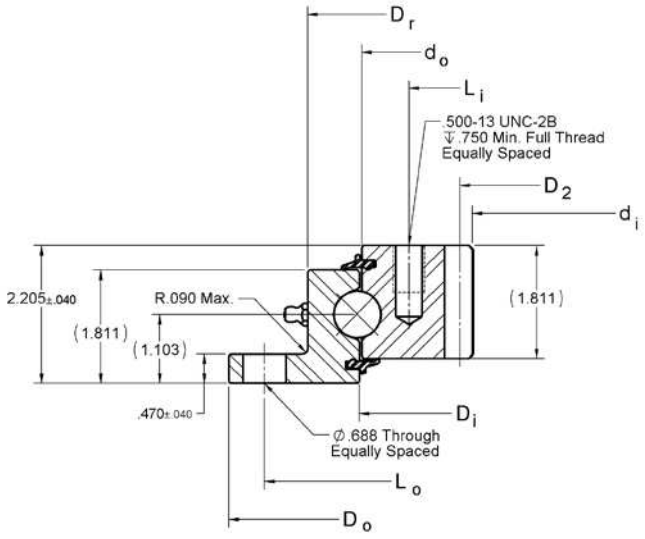

Internal Gear

Kaydon P/N	OUTLINE DIMENSIONS AND WEIGHT						
	D_o (in)	d_i (in)	D_r (in)	D_i (in)	d_o (in)	d_r (in)	G APPROX. (lbs)
RK6-16N1Z	20.390	12.850	17.870	16.220	16.140	—	65
RK6-22N1Z	25.510	17.600	22.990	21.340	21.260	—	90
RK6-25N1Z	29.450	21.600	26.930	25.280	25.200	—	106
RK6-29N1Z	33.390	25.600	30.870	29.220	29.140	—	121
RK6-33N1Z	37.320	29.133	34.800	33.150	33.070	—	148
RK6-37N1Z	41.260	33.133	38.740	37.090	37.010	—	165
RK6-43N1Z	47.170	39.133	44.650	43.000	42.920	—	188
Tolerances	±.040	+.030 -.000	+.000 -.080	Ref.	Ref.	Ref.	

Kaydon P/N	MOUNTING HOLES				GEAR DATA INV. STUB, $\alpha = 20°$				MOMENT RATING C_{rm}
	OUTER RING		INNER RING						
	L_o (in)	n_o	L_i (in)	n_i	D_2 (in)	P_d	z_2	F_Z (lbs)	(ft-lbs)
RK6-16N1Z	19.250	8	14.880	12	13.250	4	53	6800	22,700
RK6-22N1Z	24.380	10	19.630	15	18.000	4	72	6530	37,700
RK6-25N1Z	28.380	12	23.630	18	22.000	4	88	6400	49,800
RK6-29N1Z	32.250	15	27.630	18	26.000	4	104	6300	54,200
RK6-33N1Z	36.250	18	31.500	18	29.667	3	89	8520	56,500
RK6-37N1Z	40.130	18	35.500	20	33.667	3	101	8420	65,200
RK6-43N1Z	46.000	18	41.500	24	39.667	3	119	8340	75,500

Not quite what you need? Contact Kaydon to inquire about custom features such as different mounting holes, internal clearance, pilot diameters, drive arrangements, or Endurakote® plating.

RK Series

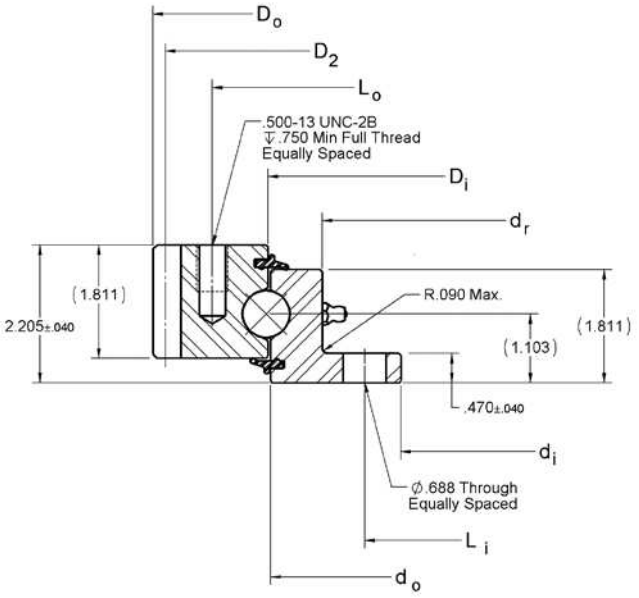

External Gear

Kaydon P/N	OUTLINE DIMENSIONS AND WEIGHT						
	D_o (in)	d_i (in)	D_r (in)	D_i (in)	d_o (in)	d_r (in)	G APPROX. (lbs)
RK6-16E1Z	19.900	11.970	—	16.220	16.140	14.490	72
RK6-22E1Z	25.150	17.090	—	21.340	21.260	19.610	96
RK6-25E1Z	29.150	21.030	—	25.280	25.200	23.550	115
RK6-29E1Z	32.900	24.970	—	29.220	29.140	27.490	128
RK6-33E1Z	37.200	28.900	—	33.150	33.070	31.420	152
RK6-37E1Z	41.200	32.840	—	37.090	37.010	35.360	172
RK6-43E1Z	46.867	38.750	—	43.000	42.920	41.270	189
Tolerances	**+.000 -.030**	**±.040**	**Ref.**	**Ref.**	**Ref.**	**+.080 -.000**	

Kaydon P/N	MOUNTING HOLES				GEAR DATA INV. STUB, $\alpha = 20°$				MOMENT RATING C_{rm}
	OUTER RING		INNER RING						
	L_o (in)	n_o	L_i (in)	n_i	D_2 (in)	P_d	z_2	F_z (lbs)	(ft-lbs)
RK6-16E1Z	18.000	8	13.130	12	19.500	4	78	5,560	22,700
RK6-22E1Z	23.250	12	18.130	15	24.750	4	99	5,650	37,700
RK6-25E1Z	27.250	15	22.130	18	28.750	4	115	5,700	49,800
RK6-29E1Z	31.000	18	26.130	18	32.500	4	130	5,740	54,200
RK6-33E1Z	35.000	18	30.000	18	36.667	3	110	7,580	56,500
RK6-37E1Z	38.880	18	34.000	20	40.667	3	122	7,620	65,200
RK6-43E1Z	44.630	20	39.880	24	46.333	3	139	7,680	75,500

Not quite what you need? Contact Kaydon to inquire about custom features such as different mounting holes, internal clearance, pilot diameters, drive arrangements, or Endurakote® plating.

RK Series Load Charts

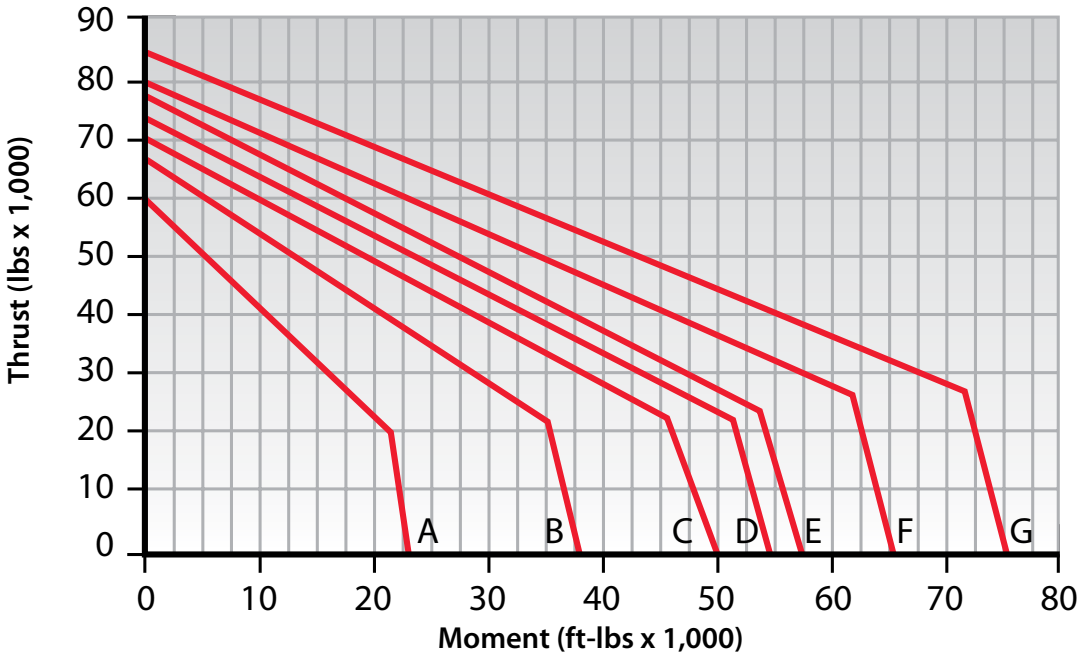

(A) RK6-16
(B) RK6-22
(C) RK6-25
(D) RK6-29
(E) RK6-33
(F) RK6-37
(G) RK6-43

Rating Charts are only applicable for operating conditions defined as NORMAL OPERATION in Section 2 and when installed and maintained as defined in Section 3 of this catalog. Bearing diameter increase does not necessarily ensure bearing rating increase due to variations in rolling elements, ring section, and fastener complements. For information concerning the basis for development of Rating Charts refer to the LOAD RATING paragraph in Section 2.

HS Series

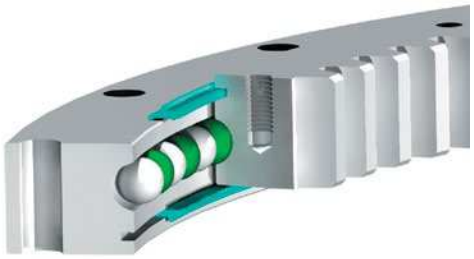

Introduction

HS Series slewing ring bearings are similar in size to the RK Series, but have rectangular cross sections, which allows for alternate hole patterns as well as improved stiffness and more capacity. They are available in sizes from 20 – 47 inches OD (500 – 1200 mm) with a standard cross section.

Design Features

The internal configuration consists of deep groove gothic arch raceways and maximum ball complement. This results in a four-point contact design which provides exceptional moment, thrust, and radial load capacities. Integral seals are provided to assist in the exclusion of contaminants.

Geared rings have tapped holes, while non-geared rings have through holes.

HS Series bearings are available in internal geared, external geared, and non-geared configurations. The gears are Involute Stub designs with 20° pressure angles, manufactured to AGMA Class Q5 and .015 to .025 inches allowance for backlash.

All models feature two fittings for lubrication, spaced 180 degrees apart. On non-geared and internal geared models, the fittings are located on the outer diameter (D_o). On the external geared models, the fittings are located on the inner diameter (d_i).

Availability

Forgings for HS Series bearings are stocked, and the finished bearings can usually be delivered promptly. Mating pinions are also generally available and can be found on page 70.

Applications

HS Series bearings have been used successfully in a variety of medium to heavy duty applications including:

- Cranes
- Aerial lifts
- Digger derricks
- Chute swivels
- Lift truck rotators
- Industrial turntable

HS Series

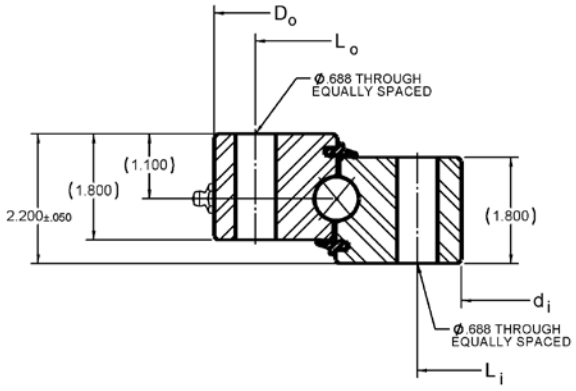

No Gear

Kaydon P/N	OUTLINE DIMENSIONS AND WEIGHT			MOUNTING HOLES				GEAR DATA INV. STUB, $\alpha = 20°$				MOMENT RATING C_{rm}
				OUTER RING		INNER RING						
	D_o	d_i	G APPROX.	L_o	n_o	L_i	n_i	D_2	P_d	z_2	F_z	
	(in)	(in)	(lbs)	(in)		(in)		(in)			(lbs)	(ft-lbs)
HS6-16P1Z	20.400	12.000	103	19.000	8	13.500	12	—	—	—	—	50,500
HS6-21P1Z	25.500	17.000	137	24.000	12	18.500	15	—	—	—	—	72,700
HS6-25P1Z	29.500	21.000	162	28.000	15	22.500	18	—	—	—	—	91,800
HS6-29P1Z	33.400	25.000	186	32.000	15	26.500	18	—	—	—	—	111,900
HS6-33P1Z	37.400	28.830	216	35.750	18	30.500	20	—	—	—	—	128,000
HS6-37P1Z	41.250	32.830	233	39.750	18	34.380	20	—	—	—	—	130,900
HS6-43P1Z	47.180	38.750	269	45.620	20	40.250	24	—	—	—	—	139,900

HS Series

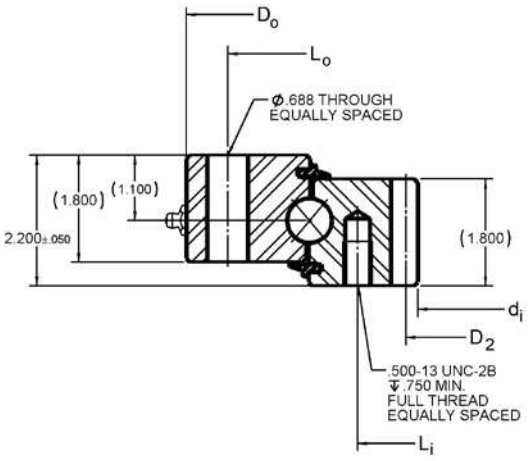

Internal Gear

Kaydon P/N	OUTLINE DIMENSIONS AND WEIGHT			MOUNTING HOLES				GEAR DATA INV. STUB, $\alpha = 20°$				MOMENT RATING C_{rm}
				OUTER RING		INNER RING						
	D_o	d_i	G APPROX.	L_o	n_o	L_i	n_i	D_2	P_d	z_2	F_z	
	(in)	(in)	(lbs)	(in)		(in)		(in)			(lbs)	(ft-lbs)
HS6-16N1Z	20.400	12.850	92	19.000	8	14.880	16	13.250	4	53	6,084	50,500
HS6-21N1Z	25.500	17.600	117	24.000	12	19.630	20	18.000	4	72	5,842	72,700
HS6-25N1Z	29.500	21.600	148	28.000	15	23.630	24	22.000	4	88	5,719	91,800
HS6-29N1Z	33.400	25.600	171	32.000	15	27.630	28	26.000	4	104	5,634	111,900
HS6-33N1Z	37.400	29.130	205	35.750	18	31.500	30	29.667	3	89	7,617	128,000
HS6-37N1Z	41.250	33.133	226	39.750	18	35.500	32	33.667	3	101	7,531	130,900
HS6-43N1Z	47.180	39.130	253	45.620	20	41.500	36	39.667	3	119	7,434	139,900

Not quite what you need? Contact Kaydon to inquire about custom features such as different mounting holes, internal clearance, pilot diameters, drive arrangements, or Endurakote® plating.

HS Series

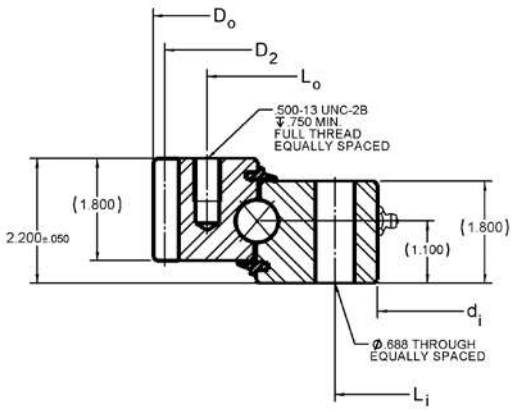

External Gear

Kaydon P/N	OUTLINE DIMENSIONS AND WEIGHT			MOUNTING HOLES				GEAR DATA INV. STUB, α = 20°				MOMENT RATING C_{rm}
				OUTER RING		INNER RING						
	D_o	d_i	G APPROX.	L_o	n_o	L_i	n_i	D_2	P_d	z_2	F_z	
	(in)	(in)	(lbs)	(in)		(in)		(in)			(lbs)	(ft-lbs)
HS6-16E1Z	19.900	12.000	85	18.000	14	13.500	12	19.500	4	78	4,981	50,500
HS6-21E1Z	25.150	17.000	108	23.250	18	18.500	15	24.750	4	99	5,076	72,700
HS6-25E1Z	29.150	21.000	137	27.250	20	22.500	18	28.750	4	115	5,127	91,800
HS6-29E1Z	32.900	25.000	158	31.000	24	26.500	18	32.500	4	130	5,164	111,900
HS6-33E1Z	37.200	28.830	188	35.000	28	30.500	20	36.667	3	110	6,817	128,000
HS6-37E1Z	41.200	32.830	207	38.880	28	34.380	20	40.667	3	122	6,860	130,900
HS6-43E1Z	46.870	38.750	237	44.630	32	40.250	24	46.333	3	139	6,910	139,900

Not quite what you need? Contact Kaydon to inquire about custom features such as different mounting holes, internal clearance, pilot diameters, drive arrangements, or Endurakote® plating.

HS Series Load Chart

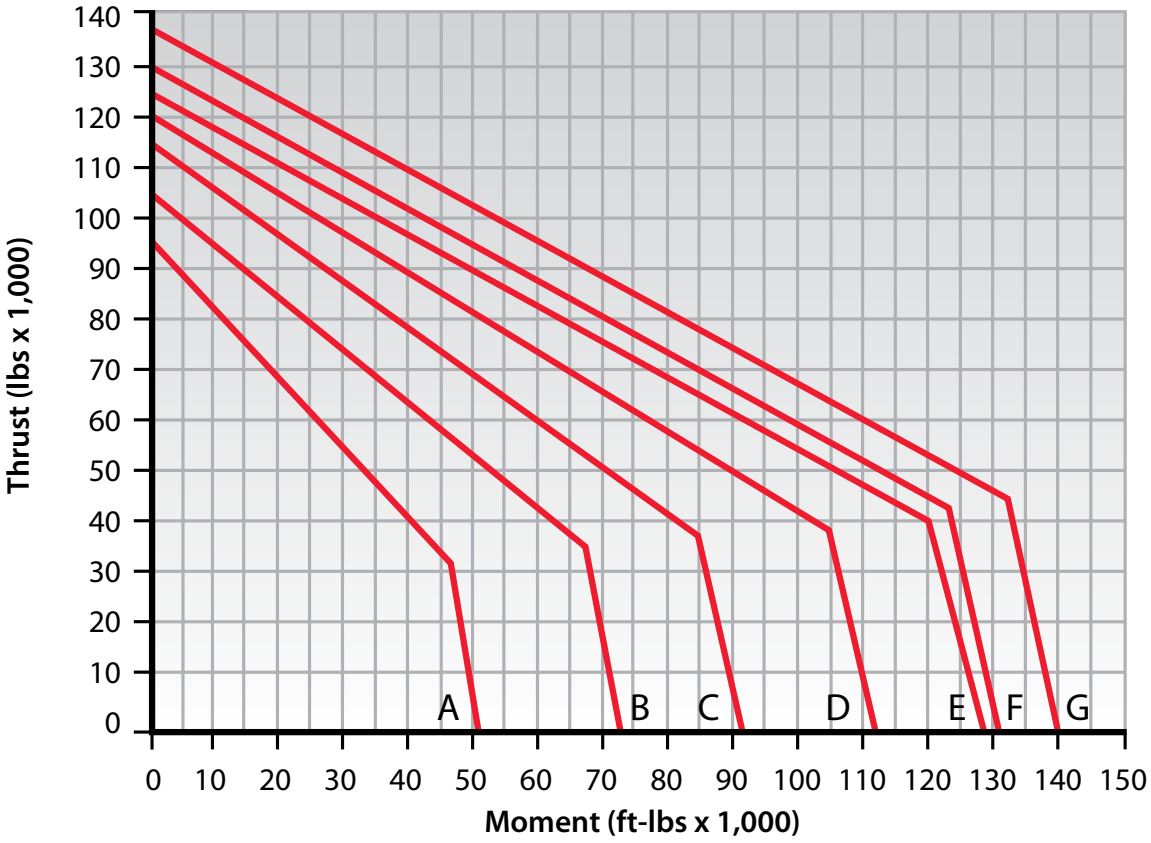

(A) HS6-016
(B) HS6-021
(C) HS6-025
(D) HS6-029
(E) HS6-033
(F) HS6-037
(G) HS6-043

Rating Charts are only applicable for operating conditions defined as NORMAL OPERATION in Section 2 and when installed and maintained as defined in Section 3 of this catalog. Bearing diameter increase does not necessarily ensure bearing rating increase due to variations in rolling elements, ring section, and fastener complements. For information concerning the basis for development of Rating Charts refer to the LOAD RATING paragraph in Section 2.

Not quite what you need? Contact Kaydon to inquire about custom features such as different mounting holes, internal clearance, pilot diameters, drive arrangements, or Endurakote® plating.

HT Series

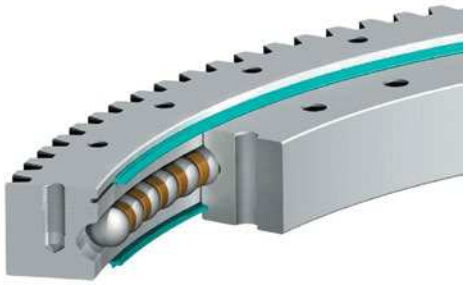

Introduction

HT Series slewing ring bearings are larger versions of the HS Series, with increased ball diameter and cross-sectional area providing substantially more capacity. They range in size from 36 – 66 inches OD (900 – 1700 mm) with a standard cross section.

Design Features

The internal configuration consists of deep groove gothic arch raceways and maximum ball complement. This results in a four-point contact design which provides exceptional moment, thrust, and radial load capacities. Integral seals are provided to assist in the exclusion of contaminants.

Geared rings have tapped holes, while non-geared rings have through holes.

HT Series bearings are available in internal geared, external geared, and non-geared configurations. The gears are Involute Stub designs with 20° pressure angles, manufactured to AGMA Class Q5 and .015 to .025 inches allowance for backlash.

All models feature two fittings for lubrication, spaced 180 degrees apart. On non-geared and internal geared models, the fittings are located on the outer diameter (D_o). On the external-geared models, the fittings are located on the inner diameter (d_i).

Availability

HT Series bearings are made to order and can require a longer lead time as forgings are not stocked.

Applications

HT Series bearings have been used successfully in a variety of medium to heavy duty applications including:

- Cranes
- Aerial lifts
- Digger derricks
- Chute swivels
- Lift truck rotators
- Industrial turntable

HT Series

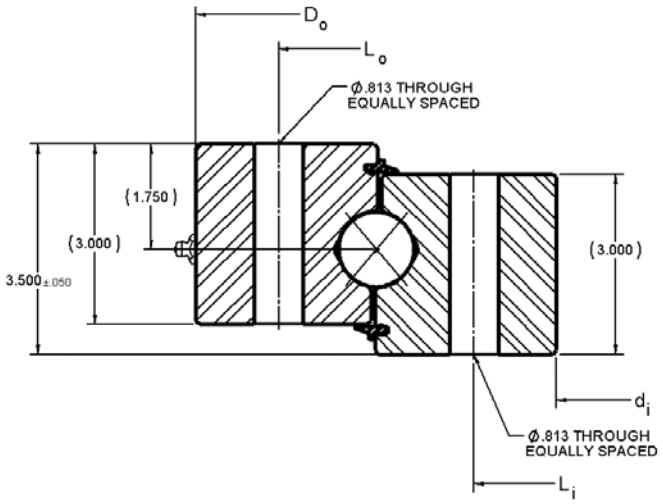

No Gear

Kaydon P/N	OUTLINE DIMENSIONS AND WEIGHT			MOUNTING HOLES				GEAR DATA INV. STUB, $\alpha = 20°$				MOMENT RATING C_{rm}
				OUTER RING		INNER RING						
	D_o	d_i	G APPROX.	L_o	n_o	L_i	n_i	D_2	P_d	z_2	F_z	
	(in)	(in)	(lbs)	(in)		(in)		(in)			(lbs)	(ft-lbs)
HT10-30P1Z	36.000	24.000	447	33.250	24	26.750	30	—	—	—	—	340,000
HT10-36P1Z	42.000	30.000	521	39.250	28	32.750	32	—	—	—	—	395,700
HT10-42P1Z	48.000	36.000	628	45.250	32	38.750	36	—	—	—	—	457,000
HT10-48P1Z	54.000	42.000	719	51.250	36	44.750	40	—	—	—	—	517,900
HT10-54P1Z	60.000	48.000	809	57.250	40	50.750	44	—	—	—	—	578,400
HT10-60P1Z	66.000	54.000	865	63.250	44	56.750	48	—	—	—	—	638,800

HT Series

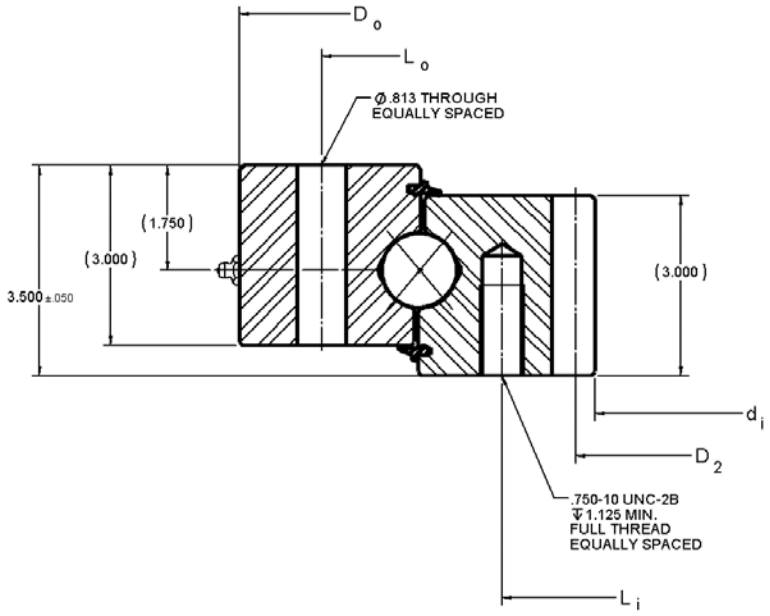

Internal Gear

Kaydon P/N	OUTLINE DIMENSIONS AND WEIGHT			MOUNTING HOLES				GEAR DATA INV. STUB, α = 20°				MOMENT RATING C_{rm}
				OUTER RING		INNER RING						
	D_o	d_i	G APPROX.	L_o	n_o	L_i	n_i	D_2	P_d	z_2	F_z	
	(in)	(in)	(lbs)	(in)		(in)		(in)			(lbs)	(ft-lbs)
HT10-30N1Z	36.000	24.160	411	33.250	24	27.250	30	24.800	2.5	62	21,783	340,000
HT10-36N1Z	42.000	30.160	517	39.250	28	33.250	32	30.800	2.5	77	21,195	395,700
HT10-42N1Z	48.000	36.160	580	45.250	32	39.250	36	36.800	2.5	92	20,819	457,000
HT10-48N1Z	54.000	42.160	689	51.250	36	45.250	40	42.800	2.5	107	20,548	517,900
HT10-54N1Z	60.000	48.160	775	57.250	40	51.250	44	48.800	2.5	122	20,344	578,400
HT10-60N1Z	66.000	54.160	842	63.250	44	57.250	48	54.800	2.5	137	20,185	638,800

HT Series

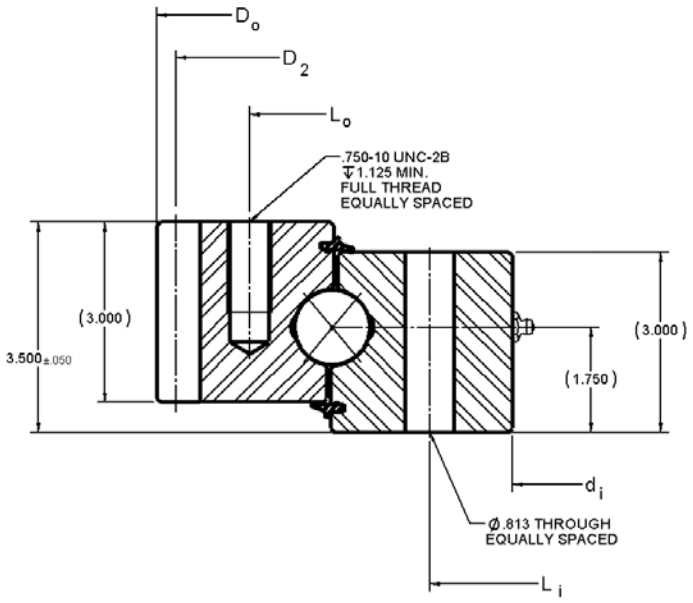

External Gear

Kaydon P/N	OUTLINE DIMENSIONS AND WEIGHT			MOUNTING HOLES				GEAR DATA INV. STUB, $\alpha = 20°$				MOMENT RATING C_{rm}
				OUTER RING		INNER RING						
	D_o	d_i	G APPROX.	L_o	n_o	L_i	n_i	D_2	P_d	z_2	F_z	
	(in)	(in)	(lbs)	(in)		(in)		(in)			(lbs)	(ft-lbs)
HT10-30E1Z	35.840	24.000	398	32.750	24	26.750	30	35.200	2.5	88	18,393	340,000
HT10-36E1Z	41.840	30.000	481	38.750	28	32.750	32	41.200	2.5	103	18,608	395,700
HT10-42E1Z	47.840	36.000	562	44.750	32	38.750	36	47.200	2.5	118	18,772	457,000
HT10-48E1Z	53.840	42.000	660	50.750	36	44.750	40	53.200	2.5	133	18,901	517,900
HT10-54E1Z	59.840	48.000	742	56.750	40	50.750	44	59.200	2.5	148	19,005	578,400
HT10-60E1Z	65.840	54.000	800	62.750	44	56.750	48	65.200	2.5	163	19,090	638,800

HT Series Load Chart

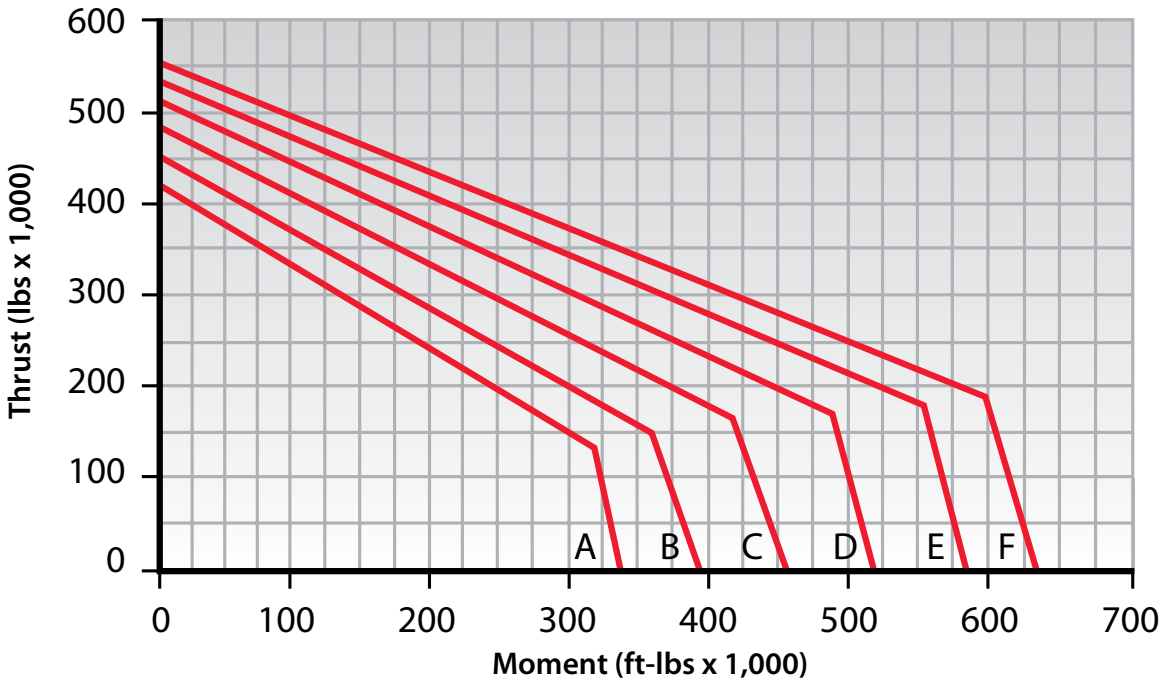

(A) HT10-030
(B) HT10-036
(C) HT10-042
(D) HT10-048
(E) HT10-054
(F) HT10-060

Rating Charts are only applicable for operating conditions defined as NORMAL OPERATION in Section 2 and when installed and maintained as defined in Section 3 of this catalog. Bearing diameter increase does not necessarily ensure bearing rating increase due to variations in rolling elements, ring section, and fastener complements. For information concerning the basis for development of Rating Charts refer to the LOAD RATING paragraph in Section 2.


PIEROL







MT Series

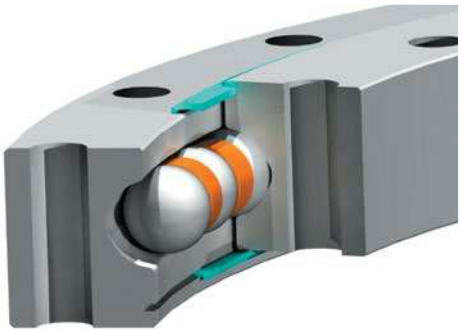

Introduction

MT Series slewing ring bearings have a rectangular cross-section and range in size from 4 – 47 inches OD (100 – 1200 mm). They provide optimal economy and capacity for a given envelope dimension.

Design Features

The internal configuration consists of deep groove gothic arch raceways and maximum ball complement. This results in a four-point contact design which provides exceptional moment, thrust, and radial load capacities. Integral face riding seals for the larger sizes and non-contact shields for the smaller assist in the exclusion of contaminants. These features make them an ideal choice for a wide range of applications from light to heavy duty.

MT Series bearings are offered in non-geared (MTO) and externally geared (MTE) configurations. The gears are Fellows Stub Involute up to the MTE-324 size and Stub Involute for larger sizes, all manufactured to AGMA Class Q6 quality. Contact Kaydon for tooth backlash allowance.

Part numbers ending in a "T" suffix have threaded mounting holes. Thread depths are a minimum of 1.5 times the nominal hole size diameter indicated.

Part numbers ending in an "X" suffix provide additional load capacity.

Versions of these standard bearings with features manufactured to higher precision requirements can be used in machine tool, material handling, power transmission, radar, and robotics applications.

Contact Kaydon to speak with an applications engineer about the following options:

- Precision runout control
- Precision gear
- Preload for zero free play and increased stiffness
- Pilot diameters
- Tapped mounting holes
- Endurakote® plating for increased corrosion resistance

Kaydon also offers a high-precision KH Series in a standard line which incorporates all the above except Endurakote® plating.

Availability

MT Series bearings are generally available from stock, and mating pinions for the geared versions through MTE-705 are also generally available. Refer to page 70 for mating pinions.

Applications

MT Series bearings have been used successfully in a wide range of applications from light to heavy duty.

The smaller sizes are well suited for:

- Manipulators
- Jib cranes
- Lift-assist devices
- Work positioners

Larger sizes are well suited for:

- Truck-mounted cranes
- Aerial lifts
- Hoists
- Small wind turbines
- Non-precision positioning tables

MT Series

MTO-050 &
MTO-065 only

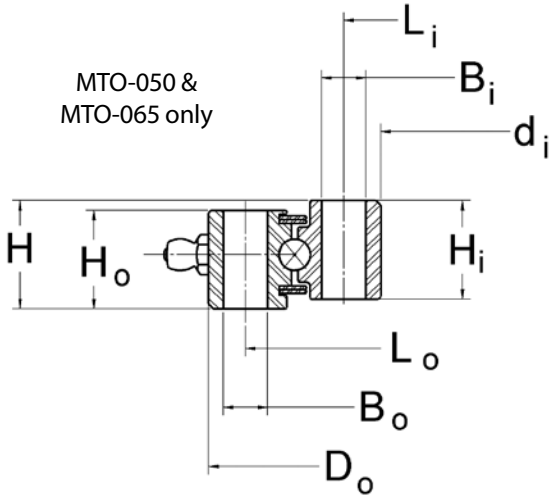

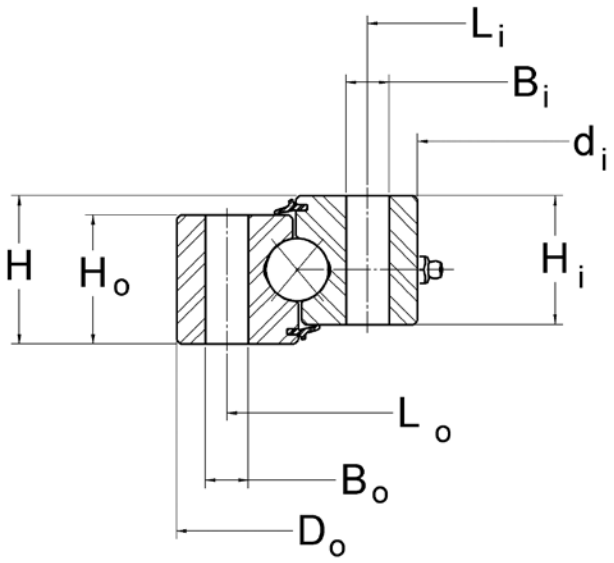

No Gear

Kaydon P/N	OUTLINE DIMENSIONS AND WEIGHT				
	D_o (in)	d_i (in)	H (in)	H_i/H_o (in)	G APPROX. (lbs)
MTO-050	4.331	1.968	0.787	0.728	2
MTO-050T	4.331	1.968	0.787	0.728	2
MTO-065	5.315	2.559	0.866	0.787	4
MTO-065T	5.315	2.559	0.866	0.787	4
MTO-122	8.898	4.803	1.339	1.142	13
MTO-122T	8.898	4.803	1.339	1.142	13
MTO-143	9.803	5.630	1.339	1.142	15
MTO-143T	9.803	5.630	1.339	1.142	15
MTO-145	11.811	5.709	1.968	1.732	37
MTO-145T	11.811	5.709	1.968	1.732	37
MTO-145X	12.286	5.709	1.968	1.732	41
MTO-170	12.205	6.693	1.811	1.614	33
MTO-170T	12.205	6.693	1.811	1.614	33
MTO-210	14.370	8.268	1.575	1.496	38
MTO-210T	14.370	8.268	1.575	1.496	38
MTO-210X	14.686	8.268	1.968	1.732	48
MTO-265	16.535	10.433	1.968	1.732	54
MTO-265T	16.535	10.433	1.968	1.732	54
MTO-265X	17.086	10.433	1.968	1.732	61
*MTO-324T	20.486	12.750	2.062	2.022	105
MTO-324X	20.486	12.770	2.375	2.063	105

* Part number MTO-324 has been superseded by MTO-324T.

MT Series

MOUNTING HOLES						MOMENT RATING C_{rm}
OUTER RING			INNER RING			
L_o (in)	n_o	B_o (in)	L_i (in)	n_i	B_i (in)	(ft-lbs)
3.818	8	0.26	2.480	8	0.26	675
3.818	8	M6	2.480	8	M6	675
4.724	8	0.354	3.149	8	0.354	1,075
4.724	8	M8	3.149	8	M8	1,075
8.189	12	0.354	5.512	12	0.354	5,020
8.189	12	M8	5.512	12	M8	5,020
8.937	12	0.433	6.496	12	0.433	8,950
8.937	12	M10	6.496	12	M10	8,950
10.630	16	0.562	6.890	16	0.562	26,000
10.630	16	5/8-11	6.890	16	5/8-11	26,000
10.630	16	0.594	6.890	16	0.594	30,600
11.024	12	0.512	7.874	12	0.512	16,520
11.024	12	M12	7.874	12	M12	16,520
13.190	16	0.562	9.449	20	0.562	44,500
13.190	16	5/8-11	9.449	20	5/8-11	44,500
13.190	16	0.594	9.449	20	0.594	52,100
15.354	18	0.562	11.614	24	0.562	62,000
15.354	18	5/8-11	11.614	24	5/8-11	62,000
15.354	18	0.594	11.614	24	0.594	71,900
18.875	20	5/8-11	14.375	20	5/8-11	102,400
18.875	20	0.688	14.375	20	0.688	102,400

MT Series

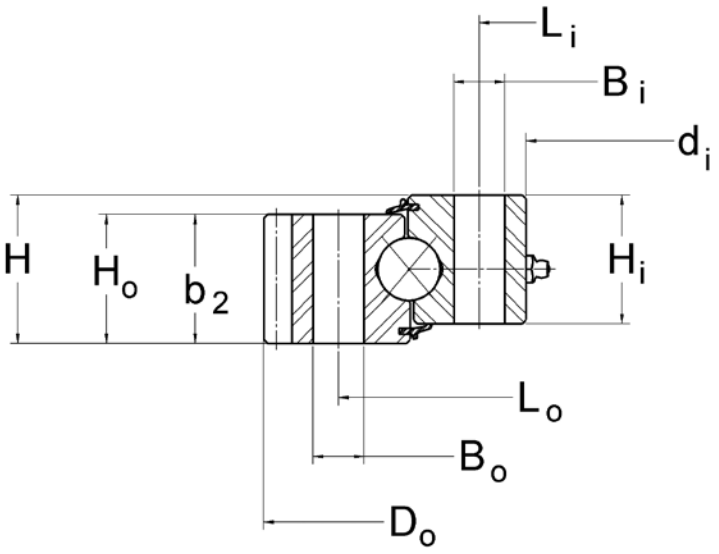

External Gear

Kaydon P/N	OUTLINE DIMENSIONS AND WEIGHT					MOUNTING HOLES					
						OUTER RING			INNER RING		
	D_o (in)	d_i (in)	H (in)	H_i/H_o (in)	G APPROX. (lbs)	L_o (in)	n_o	B_o (in)	L_i (in)	n_i	B_i (in)
MTE-145	12.286	5.709	1.968	1.732	38	10.630	16	0.562	6.890	16	0.562
MTE-145T	12.286	5.709	1.968	1.732	38	10.630	16	5/8-11	6.890	16	5/8-11
MTE-145X	12.286	5.709	1.968	1.732	38	10.630	16	0.594	6.890	16	0.594
MTE-210	14.686	8.268	1.575	1.496	38	13.190	16	0.562	9.449	20	0.562
MTE-210T	14.686	8.268	1.575	1.496	38	13.190	16	5/8-11	9.449	20	5/8-11
MTE-210X	14.686	8.268	1.968	1.732	44	13.190	16	0.594	9.449	20	0.594
MTE-265	17.086	10.433	1.968	1.732	57	15.354	18	0.562	11.614	24	0.562
MTE-265T	17.086	10.433	1.968	1.732	57	15.354	18	5/8-11	11.614	24	5/8-11
MTE-265X	17.086	10.433	1.968	1.732	57	15.354	18	0.594	11.614	24	0.594
*MTE-324T	20.486	12.750	2.062	2.022	98	18.875	20	5/8-11	14.375	20	5/8-11
MTE-324X	20.486	12.770	2.375	2.063	99	18.875	20	0.688	14.375	20	0.688
MTE-415	24.650	16.250	2.375	2.063	132	22.250	16	0.813	17.750	20	0.813
MTE-415T	24.650	16.250	2.375	2.063	132	22.250	16	3/4-10	17.750	20	3/4-10
MTE-470	26.900	18.500	2.375	2.063	147	24.500	18	0.813	20.000	24	0.813
MTE-470T	26.900	18.500	2.375	2.063	147	24.500	18	3/4-10	20.000	24	3/4-10
MTE-540	29.650	21.250	2.375	2.063	163	27.250	24	0.813	22.750	28	0.813
MTE-540T	29.650	21.250	2.375	2.063	163	27.250	24	3/4-10	22.750	28	3/4-10
MTE-590	33.534	23.125	2.875	2.563	283	30.625	18	0.938	24.875	24	0.938
MTE-590T	33.534	23.125	2.875	2.563	283	30.625	18	7/8-9	24.875	24	7/8-9
MTE-705	38.201	27.750	2.875	2.563	325	35.250	24	0.938	29.50	28	0.938
MTE-705T	38.201	27.750	2.875	2.563	325	35.250	24	7/8-9	29.50	28	7/8-9
MTE-730	41.85	28.750	3.250	2.880	491	38.000	20	1.063	31.00	24	1.063
MTE-730T	41.85	28.750	3.250	2.880	491	38.000	20	1-8	31.00	24	1-8
MTE-870	47.444	34.250	4.250	3.875	771	43.875	24	1.188	36.25	28	1.188
MTE-870T	47.444	34.250	4.250	3.875	771	43.875	24	1 1/8-7	36.25	28	1 1/8-7

* Part number MTE-324 has been superseded by MTE-324T.

MT Series

GEAR DATA $\alpha = 20°$					F_z (lbs) MAX GEAR TOOTH LOAD	MOMENT RATING C_{rm}
TOOTH FORM	D_2 (in)	P_d	z_2	b_2 (in)		(ft-lbs)
FS	12.000	5/7	60	1.732	7,140	26,000
FS	12.000	5/7	60	1.732	7,140	26,000
FS	12.000	5/7	60	1.732	7,140	30,600
FS	14.400	5/7	72	1.496	5,810	44,500
FS	14.400	5/7	72	1.496	5,810	44,500
FS	14.400	5/7	72	1.732	7,290	52,100
FS	16.800	5/7	84	1.732	7,330	62,000
FS	16.800	5/7	84	1.732	7,330	62,000
FS	16.800	5/7	84	1.732	7,330	71,900
FS	20.200	5/7	101	2.022	8,700	102,400
FS	20.200	5/7	101	2.063	8,863	102,400
SD	24.250	4	97	2.063	10,420	159,200
SD	24.250	4	97	2.063	10,420	159,200
SD	26.500	4	106	2.063	10,460	191,600
SD	26.500	4	106	2.063	10,460	191,600
SD	29.250	4	117	2.063	10,520	232,000
SD	29.250	4	117	2.063	10,520	232,000
SD	33.000	3	99	2.563	17,290	338,700
SD	33.000	3	99	2.563	17,290	338,700
SD	37.667	3	113	2.563	17,390	443,200
SD	37.667	3	113	2.563	17,390	443,200
SD	41.200	2.5	103	2.630	21,290	588,000
SD	41.200	2.5	103	2.630	21,290	588,000
SD	46.800	2.5	117	3.875	31,620	873,800
SD	46.800	2.5	117	3.875	31,620	873,800

MT Series Load Charts

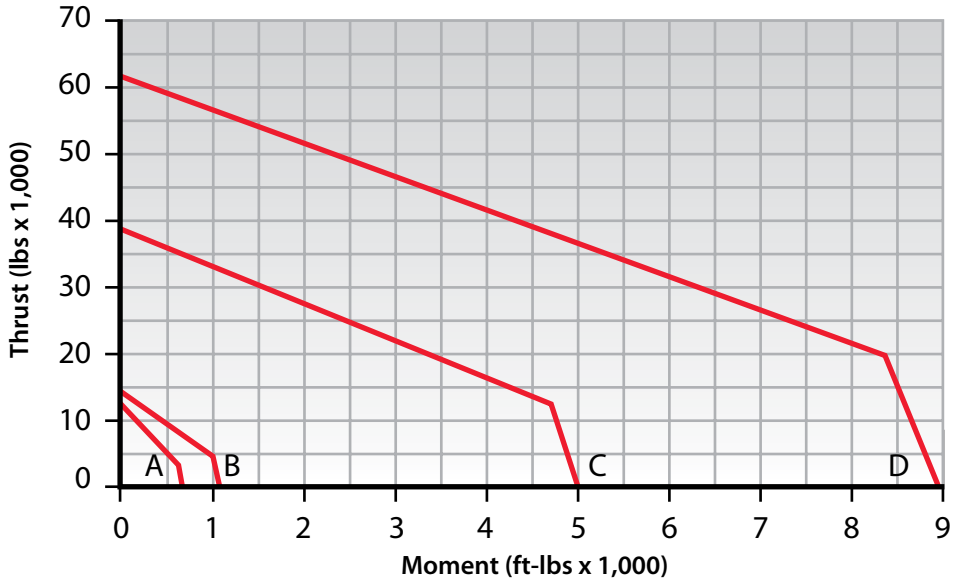

(A) MT-050
(B) MT-065
(C) MT-122
(D) MT-143

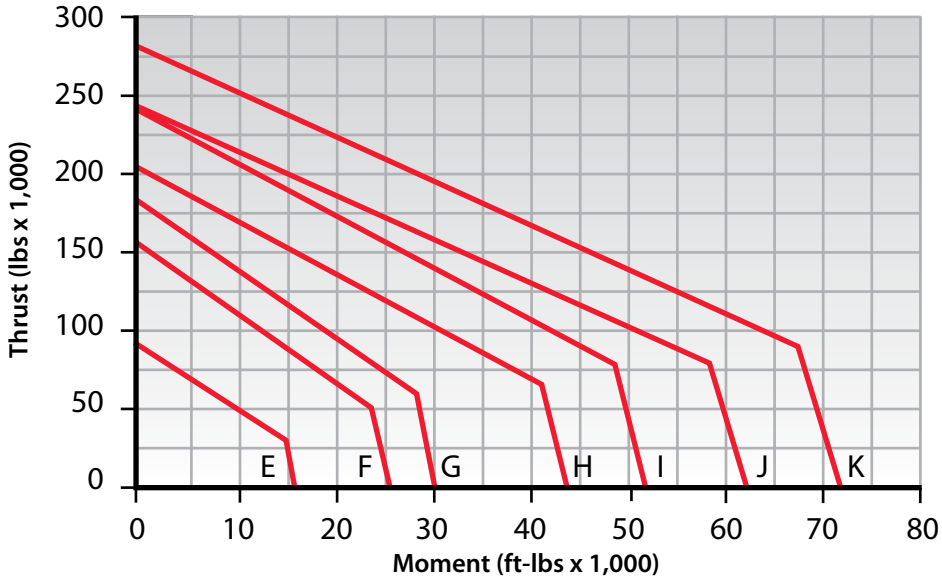

(E) MT-170
(F) MT-145
(G) MT-145X
(H) MT-210
(I) MT-210X
(J) MT-265
(K) MT-265X

Rating Charts are only applicable for operating conditions defined as NORMAL OPERATION in Section 2 and when installed and maintained as defined in Section 3 of this catalog. Bearing diameter increase does not necessarily ensure bearing rating increase due to variations in rolling elements, ring section, and fastener complements. For information concerning the basis for development of Rating Charts refer to the LOAD RATING paragraph in Section 2.

MT Series Load Charts

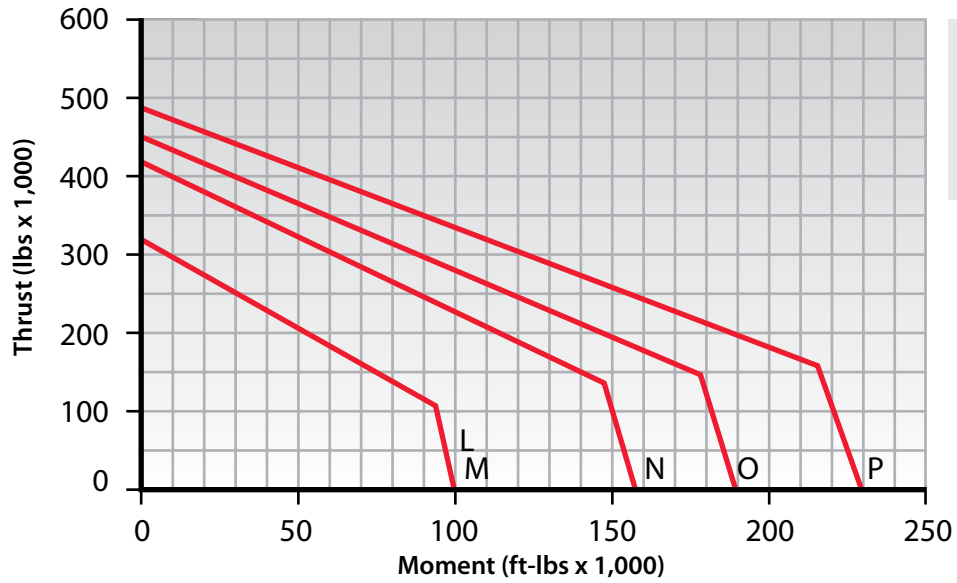

(L) MT-324
(M) MT-324X
(N) MT-415
(O) MT-470
(P) MT-540

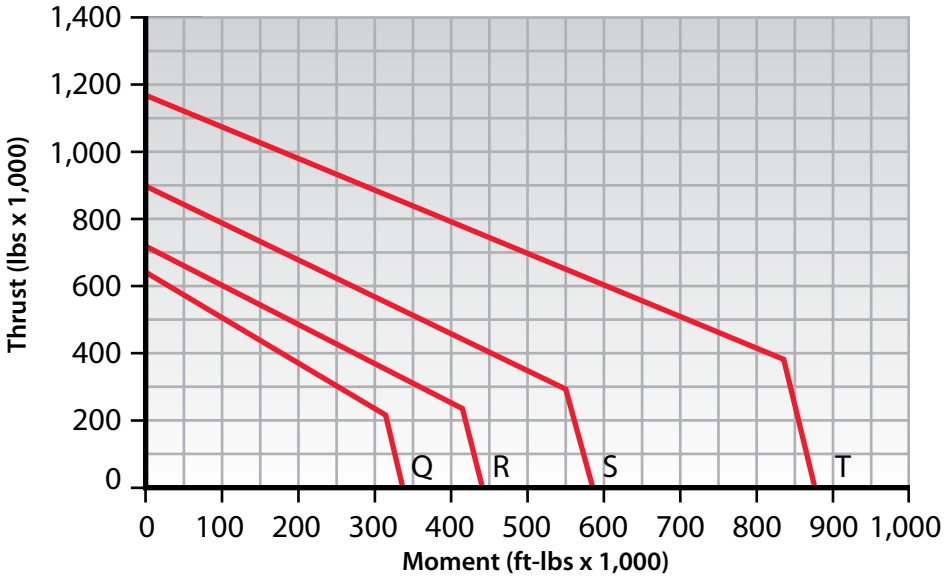

(Q) MT-590
(R) MT-705
(S) MT-730
(T) MT-870

Rating Charts are only applicable for operating conditions defined as NORMAL OPERATION in Section 2 and when installed and maintained as defined in Section 3 of this catalog. Bearing diameter increase does not necessarily ensure bearing rating increase due to variations in rolling elements, ring section, and fastener complements. For information concerning the basis for development of Rating Charts refer to the LOAD RATING paragraph in Section 2.

Pinion Tables for RK, HS and MT Series

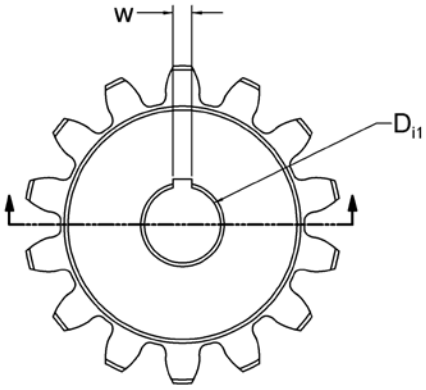

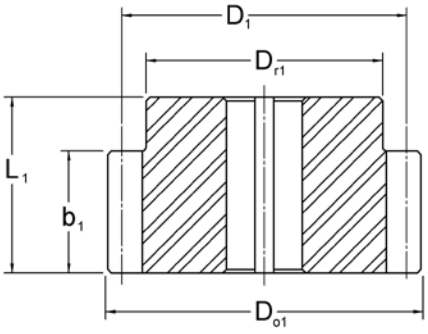

Mating Pinions for RK Series Bearings

BEARING P/N	PINION P/N	GEAR DATA (α = 20°)				OUTLINE DIMENSIONS AND WEIGHT						
		TOOTH FORM	z_1	P_d (in)	b_1 (in)	L_1 (in)	D_1 (in)	D_{o1} (in)	D_{r1} (in)	D_{i1} (in)	w (in)	G APPROX. (lbs)
RK6-16 thru RK6-29	39200001 39200002	SD	14 17	4 4	2.000 2.000	2.880 2.880	3.500 4.250	3.900 4.650	2.880 3.630	1.000 1.000	1/4	6.4 10.0
RK6-33 thru RK6-43	39200003 39200004	SD	14 17	3 3	2.000 2.000	2.880 2.880	4.667 5.667	5.200 6.200	3.880 4.880	1.250 1.250	5/16	11.4 18.3
Tolerances				Ref.	±.015	±.015	Ref.	+.000 -.010	Ref.	+.002 -.000		

Mating Pinions for HS Series Bearings

BEARING P/N	PINION P/N	GEAR DATA (α = 20°)				OUTLINE DIMENSIONS AND WEIGHT						
		TOOTH FORM	z_1	P_d (in)	b_1 (in)	L_1 (in)	D_1 (in)	D_{o1} (in)	D_{r1} (in)	D_{i1} (in)	w (in)	G APPROX. (lbs)
HS6-16 thru HS6-29	39200001 39200002	SD	14 17	4 4	2.000 2.000	2.880 2.880	3.500 4.250	3.900 4.650	2.880 3.630	1.000 1.000	1/4	6.4 10.0
HS6-33 thru HS6-43	39200003 39200004	SD	14 17	3 3	2.000 2.000	2.880 2.880	4.667 5.667	5.200 6.200	3.880 4.880	1.250 1.250	5/16	11.4 18.3
Tolerances				Ref.	±.015	±.015	Ref.	+.000 -.010	Ref.	+.002 -.000		

Mating Pinions for MT Series Bearings

BEARING P/N	PINION P/N	GEAR DATA (α = 20°)				OUTLINE DIMENSIONS AND WEIGHT						
		TOOTH FORM	z_1	P_d (in)	b_1 (in)	L_1 (in)	D_1 (in)	D_{o1} (in)	D_{r1} (in)	D_{i1} (in)	w (in)	G APPROX. (lbs)
MTE-145 thru MTE-324	39201001	FS	17	5/7	2.25	3.125	3.4	3.686	2.906	1.000	1/4	6.6
MTE-415 thru MTE-540	39200001 39200002	SD	14 17	4 4	2.000 2.000	2.880 2.880	3.500 4.250	3.900 4.650	2.880 3.630	1.000 1.000	1/4	6.4 10.0
MTE-590 thru MTE-705	39200003 39200004	SD	14 17	3 3	2.000 2.000	2.880 2.880	4.667 5.667	5.200 6.200	3.880 4.880	1.250 1.250	5/16	11.4 18.3
Tolerances				Ref.	±.015	±.015	Ref.	-0.01	Ref.	0.002		

KH Series

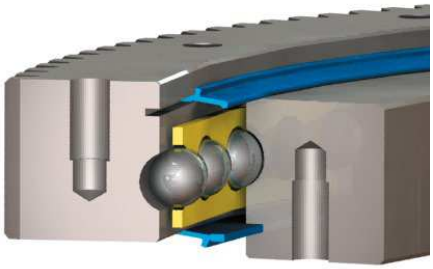

Introduction

KH Series slewing ring bearings have a rectangular cross-section and range in size from 16 – 37 inches OD (400 – 950 mm). They provide precise positioning and repeatability in applications where rotation is constant, intermittent, or oscillating.

Design Features

The internal configuration is a deep-groove gothic arch raceway, which provides four points of contact with the balls, enabling it to carry radial, thrust, and moment loads individually or simultaneously. The use of internal diametral preload provides for greater stiffness, which combined with tightly controlled radial and axial runouts, delivers accurate repeatability. The axial runouts are 0.001 inch TIR and the radial runouts for locating diameters are 0.002 inch TIR.

A separator is used to maintain consistent ball spacing interval, keep friction to a minimum, and minimize noise. Integral face riding seals are provided to assist in the exclusion of contaminants.

KH Series bearings are offered in non-geared and externally geared configurations. The gears have Full Depth Involute teeth and are manufactured to an AGMA Class Q8 quality, allowing for decreased backlash, more accurate positioning, and less noise while operating.

Availability

KH Series bearings are generally available from stock.

Applications

KH Series bearings have been used successfully in applications demanding higher precision, including:

- Precision rotary index tables
- Radar antennas
- Satellite antennas
- Robots
- Medical equipment
- Machine tool tables
- Any design where the KH bearing features will interface with other precision components.

KH Series

No Gear

Kaydon P/N	OUTLINE DIMENSIONS AND WEIGHT					HOLE DATA				GEAR DATA			GEAR TOOTH RATING
						OUTER RING		INNER RING					
	D_o (in)	d_i (in)	D_i (in)	d_o (in)	G APPROX. (lbs)	L_o (in)	n_o	L_i (in)	n_i	D_2 (in)	b_2 (in)	z_2	F_z (lbs)
KH-125P	16.500	8.625	12.750	12.250	80	14.750	16	10.250	16	—	—	—	—
KH-166P	20.500	12.750	16.875	16.375	105	18.875	20	14.375	20	—	—	—	—
KH-225P	26.700	18.500	22.750	22.250	150	24.500	18	20.500	18	—	—	—	—
KH-275P	31.700	23.500	27.750	27.250	185	29.500	24	25.500	24	—	—	—	—
KH-325P	36.700	28.500	32.750	32.250	220	34.500	28	30.500	28	—	—	—	—
TOLERANCES	±.050	±.050	*Note	*Note		⌖ .030		⌖ .030					

External Gear

Kaydon P/N	OUTLINE DIMENSIONS AND WEIGHT					HOLE DATA				GEAR DATA - FD INVOLUTE $P_d = 6$, $\alpha = 20°$, AGMA Q8			GEAR TOOTH RATING
						OUTER RING		INNER RING					
	D_o (in)	d_i (in)	D_i (in)	d_o (in)	G APPROX. (lbs)	L_o (in)	n_o	L_i (in)	n_i	D_2 (in)	b_2 (in)	z_2	F_z (lbs)
KH-125E	16.500	8.625	12.750	12.250	75	14.750	16	10.250	16	16.167	2.000	97	5,480
KH-166E	20.500	12.750	16.875	16.375	100	18.875	20	14.375	20	20.167	2.000	121	5,570
KH-225E	26.667	18.500	22.750	22.250	140	24.500	18	20.500	18	26.333	2.000	158	5,670
KH-275E	31.667	23.500	27.750	27.250	175	29.500	24	25.500	24	31.333	2.000	188	5,700
KH-325E	36.667	28.500	32.750	32.250	205	34.500	28	30.500	28	36.333	2.000	218	5,730
TOLERANCES	+0/-.020	±.050	*Note	*Note		⌖ .030		⌖ .030		±.030			

Dynamic and Intermittent Capacities

Size	Dynamic		Intermittent	
	Axial (lbs)	Moment (ft-lbs)	Axial (lbs)	Moment (ft-lbs)
KH-125	32,000	13,100	60,000	25,800
KH-166	36,000	20,500	82,800	45,200
KH-225	40,000	30,500	115,200	56,000
KH-275	43,000	39,600	142,000	75,000
KH-325	45,000	48,100	167,000	92,000

Note: Dynamic-L_{10} capabilities based on million revolutions. Values do not apply simultaneously.

Intermittent-Individual capacity limits for maximum loading when normal mode of operation is an intermittent load application and rotation.

*Note:

$D_i = d_o$ = +0/-.002 tolerance for KH-125 through KH-225.

$D_i = d_o$ = +0/-.003 tolerance for KH-275 through KH-325.

KH Series

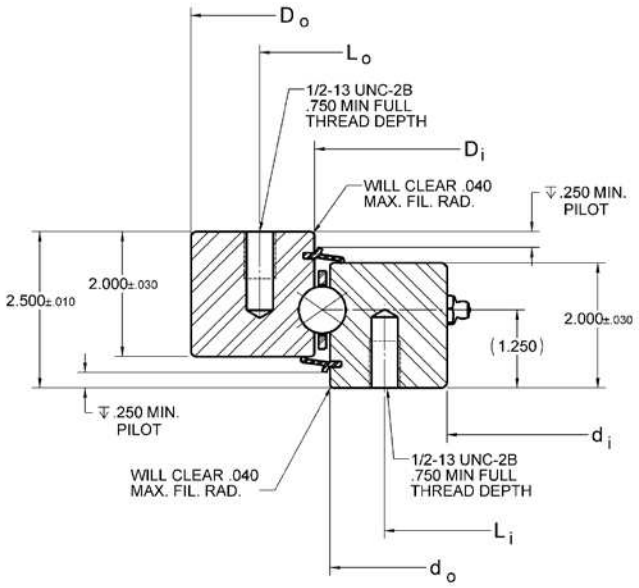

Non-geared

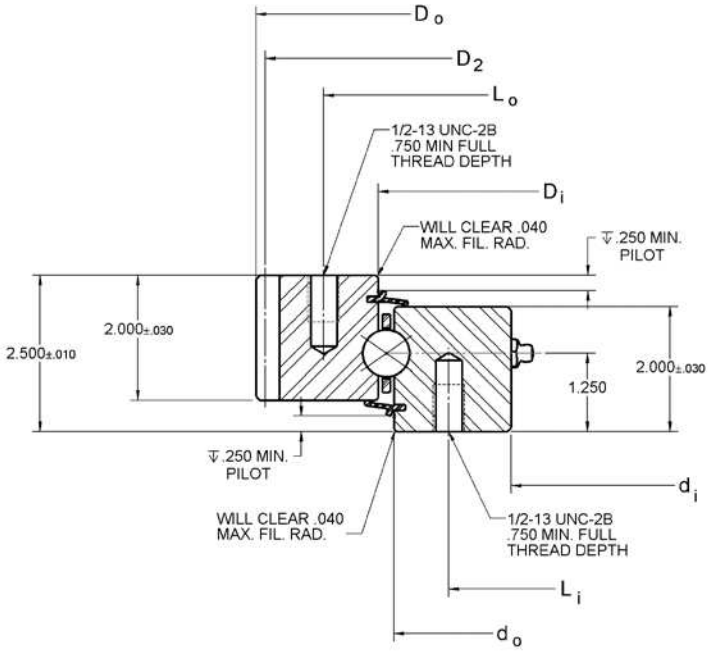

External geared

KH Series Deflection Chart

KH Series Radial Deflection

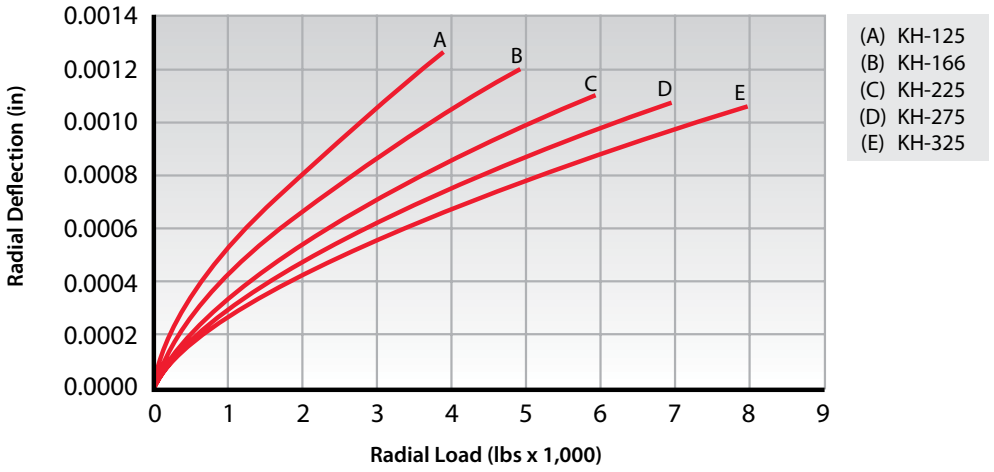

KH Series Axial Deflection

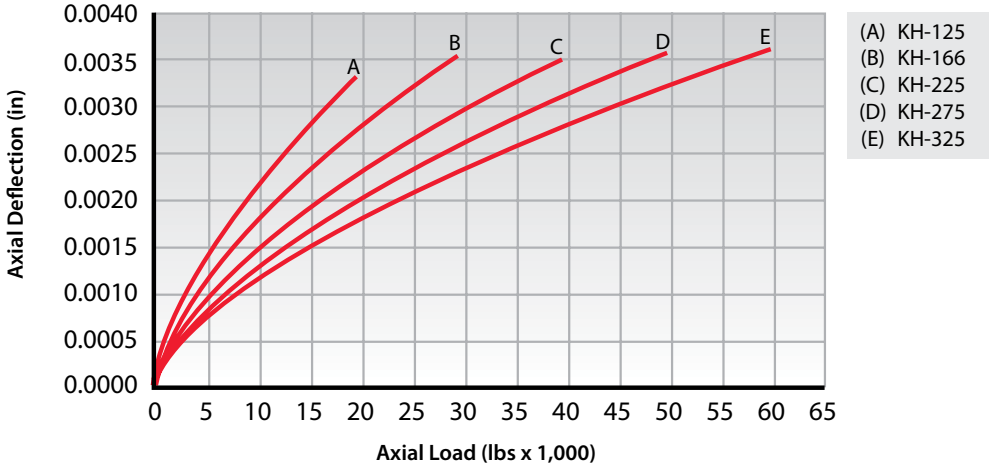

KH Series Tilt of Axis

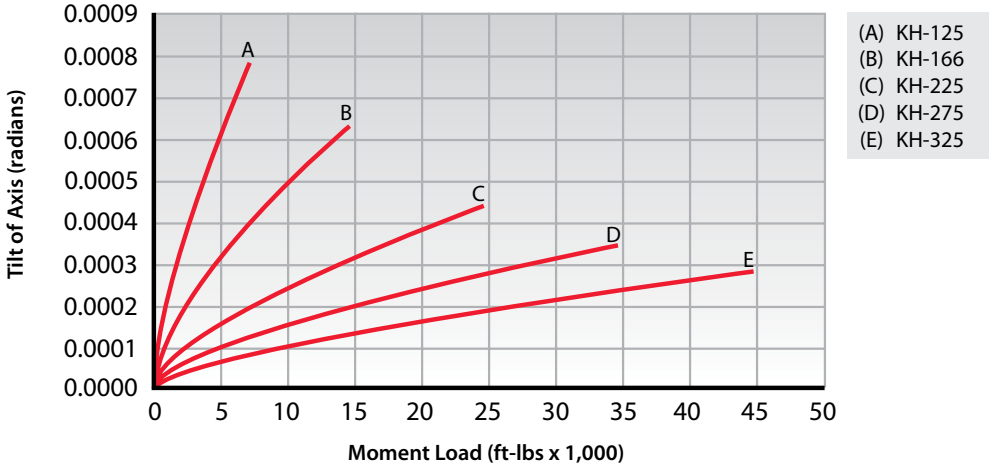

XT Series

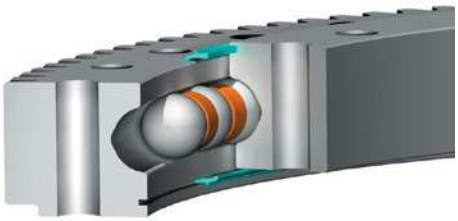

Introduction

XT Series slewing ring bearings are custom designs having a rectangular cross-section, and are available in sizes up to 218 inches OD (5500 mm). They are well suited for a wide range of applications where our standard product series do not meet your size, capacity, or weight requirements.

Design Features

The internal configuration consists of deep groove gothic arch raceways and maximum ball complement. This results in a four-point contact design which provides exceptional moment, thrust, and radial load capacities. Integral seals are provided to assist in the exclusion of contaminants.

XT Series bearings are available in internal geared, external geared, and non-geared configurations.

Availability

XT Series bearings are made to order, and can be customized for the specific application.

Applications

XT Series bearings have been used successfully in a wide range of applications, including:

- Cranes
- Aerial lifts
- Excavators
- Wind turbines
- Utility derricks
- Log loaders and feller bunchers
- Grapples
- Mining equipment

XT Series

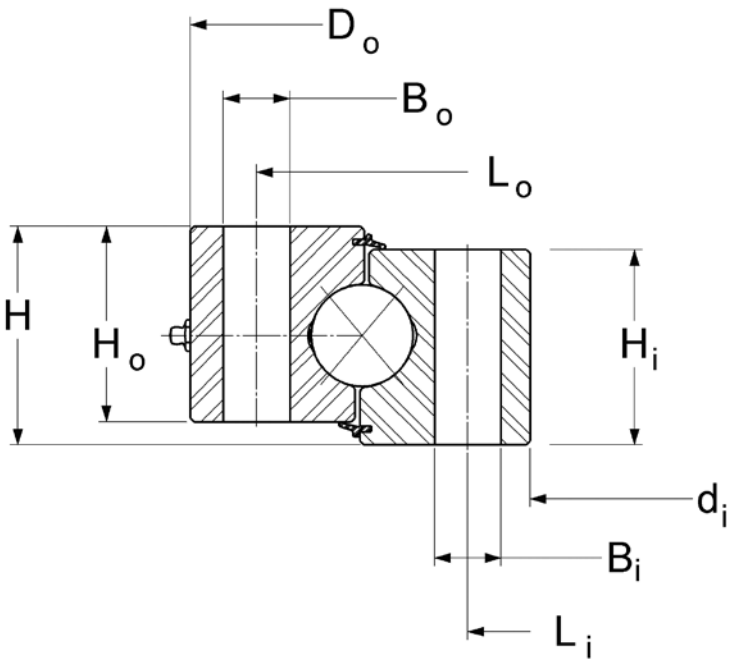

No Gear

Kaydon P/N	OUTLINE DIMENSIONS AND WEIGHT							
	D_o (in)	d_i (in)	H (in)	H_o (in)	H_i (in)	D_r* (in)	d_r* (in)	G APPROX. (lbs)
12740001	24.650	16.250	2.375	2.063	2.063	—	—	145
12750001	26.900	18.500	2.375	2.063	2.063	—	—	155
12770001	29.650	21.250	2.375	2.063	2.063	—	—	180
12775001	33.534	23.125	2.875	2.563	2.563	—	—	305
12780001	38.201	27.750	2.875	2.563	2.563	—	—	350
12785001	41.850	28.750	3.250	2.880	2.880	—	—	530
12790001	47.444	34.250	4.250	3.875	3.875	—	—	835
16289001	61.250	52.325	3.540	2.800	2.800	—	—	585
16389001	87.992	69.094	6.024	5.512	5.512	—	—	3,330
16290001	129.000	113.000	5.500	5.000	5.000	—	—	3,950
16291001	178.000	162.000	5.500	5.000	5.000	—	—	5,350

*No internal or external diameters for this type.

XT Series

HOLE DATA						GEAR DATA $\alpha = 20°$						GEAR TOOTH RATING	BEARING MOMENT RATING
OUTER RING			INNER RING										
L_o (in)	n_o	B_o (in)	L_i (in)	n_i	B_i (in)	TOOTH FORM	D_2 (in)	P_d or (m)	z_2	x_2	b_2 (in)	F_z (lbs)	C_{rm} (ft-lbs)
22.250	16	0.813	17.750	20	0.813	—	—	—	—	—	—	—	159,000
24.500	18	0.813	20.000	24	0.813	—	—	—	—	—	—	—	188,000
27.250	24	0.813	22.750	28	0.813	—	—	—	—	—	—	—	232,000
30.625	18	0.938	24.875	24	0.938	—	—	—	—	—	—	—	338,000
35.250	24	0.938	29.500	28	0.938	—	—	—	—	—	—	—	443,000
38.000	20	1.063	31.000	24	1.063	—	—	—	—	—	—	—	587,000
43.875	24	1.188	36.250	28	1.188	—	—	—	—	—	—	—	873,000
59.625	30	0.844	54.000	30	0.844	—	—	—	—	—	—	—	348,000
83.543	52	1.535	73.543	52	1.535	—	—	—	—	—	—	—	3,675,000
125.500	72	1.063	116.500	72	1.063	—	—	—	—	—	—	—	1,337,000
174.500	96	1.063	165.500	96	1.063	—	—	—	—	—	—	—	2,258,000

XT Series

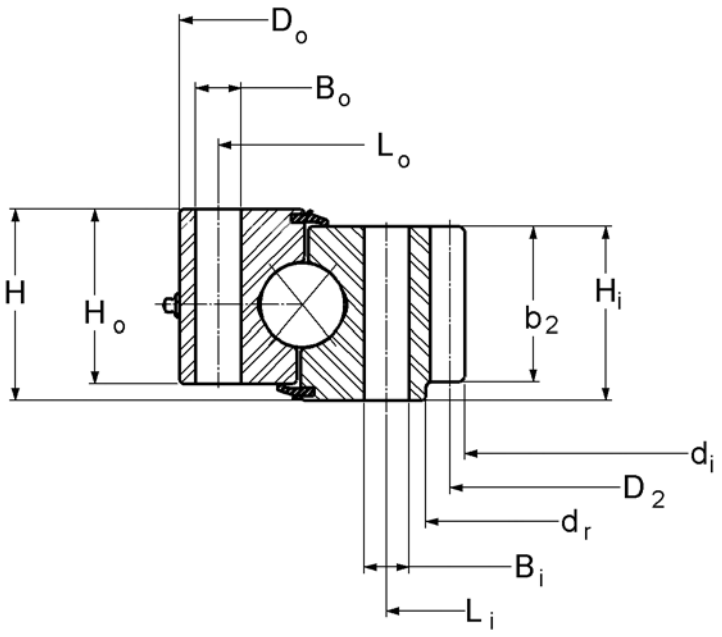

Internal Gear

Kaydon P/N	OUTLINE DIMENSIONS AND WEIGHT							
	D_o (in)	d_i (in)	H (in)	H_o (in)	H_i (in)	D_r* (in)	d_r (in)	G APPROX. (lbs)
16292001	16.625	9.714	1.968	1.732	1.732	—	—	65
16293001	20.486	12.750	2.060	2.000	2.000	—	—	105
16294001	25.750	16.850	2.750	2.375	2.375	—	—	180
16295001	28.937	19.600	2.834	2.480	2.480	—	—	225
16296001	34.252	24.921	2.834	2.480	2.480	—	—	270
16390001	40.880	30.560	3.380	2.560	3.000	—	32.375	375
16374001	48.250	36.400	4.000	3.500	3.500	—	38.250	660
16297001	54.375	41.280	5.000	3.875	4.625	—	43.000	1,090
16298001	62.250	47.760	4.875	4.375	4.375	—	49.325	1,370
16299001	72.500	57.000	6.000	5.000	5.000	—	59.380	1,900
16300001	81.750	62.267	6.500	5.625	6.125	—	64.750	3,080
16301001	102.500	85.360	7.440	6.780	5.660	—	88.380	3,750
16302001	117.000	93.600	7.125	6.500	6.500	—	96.375	6,200
16303001	148.425	135.039	4.724	4.134	4.134	—	136.890	3,000
16304001	168.000	151.700	6.000	5.500	5.500	—	153.940	5,500

*No external diameters for this type.

XT Series

HOLE DATA						GEAR DATA $\alpha = 20°$						GEAR TOOTH RATING	BEARING MOMENT RATING
OUTER RING			INNER RING										
L_o (in)	n_o	B_o (in)	L_i (in)	n_i	B_i (in)	TOOTH FORM	D_2 (in)	P_d or (m)	z_2	x_2	b_2 (in)	F_z (lbs)	C_{rm} (ft-lbs)
15.354	18	0.594	11.614	24	0.594	FS	10.000	5/7	50	0	1.732	7,800	71,800
18.875	20	0.594	14.375	20	0.594	FS	13.000	5/7	65	0	2.000	8,800	81,300
24.500	18	0.688	19.500	24	0.688	SD	17.250	4	69	0	2.375	12,750	143,000
27.165	24	0.813	22.126	30	0.813	SD	20.000	4	80	0	2.480	13,250	244,000
32.480	30	0.813	27.441	36	0.813	SD	25.250	4	101	-.15	2.480	12,900	343,000
39.250	40	0.813	33.750	40	0.813	SD	31.200	2.5	78	0	2.750	20,230	461,000
46.125	30	0.938	39.875	36	0.938	FD	37.200	2.5	93	0	3.250	21,290	720,000
52.500	48	0.938	45.250	48	0.938	SD	41.600	2.5	104	-.40	3.000	24,900	1,131,000
59.750	48	1.063	51.750	48	1.063	SD	48.400	2.5	121	0	4.312	38,500	1,650,000
69.750	48	1.063	61.500	48	1.063	FD	58.000	2	116	0	4.500	46,600	1,831,000
78.750	52	1.312	67.625	52	1.312	SD	63.333	1.5	95	0	5.000	75,450	3,764,000
99.803	60	1.312	91.142	60	1.312	FD	86.667	1.5	130	0	5.500	81,500	3,457,000
113.000	52	1.562	100.000	52	1.562	SD	94.667	1.5	142	0	4.750	69,900	6,125,000
146.457	72	0.866	138.583	72	0.866	FD	135.827	(10)	345	0	3.543	25,300	1,013,000
165.120	90	1.313	156.000	90	1.313	SD	152.500	2	305	0	5.000	45,400	3,003,000

XT Series

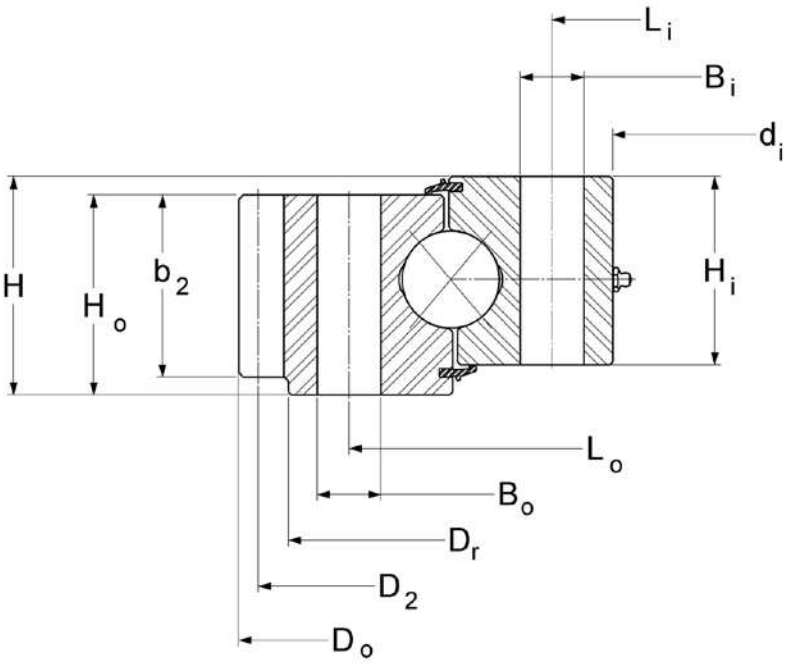

External Gear

Kaydon P/N	OUTLINE DIMENSIONS AND WEIGHT							
	D_o (in)	d_i (in)	H (in)	H_o (in)	H_i (in)	D_r (in)	d_r* (in)	G APPROX. (lbs)
16305001	9.500	4.813	1.344	1.141	1.141	—	—	15
16306001	21.286	12.438	2.812	2.656	2.656	—	—	140
16307001	30.457	19.000	3.625	3.250	3.250	—	—	330
12440001	39.400	29.500	3.875	3.031	3.031	38.375	—	390
16308001	50.640	37.750	4.000	3.620	3.620	—	—	770
12288001	54.300	42.000	4.625	3.625	3.625	52.250	—	770
16309001	56.240	41.370	4.750	3.850	4.400	—	—	1,133
16310001	61.300	47.125	5.875	4.688	4.688	59.375	—	1,420
16311001	75.000	54.500	6.500	5.875	5.875	72.560	—	2,865
16312001	85.067	66.750	7.120	6.500	6.620	82.120	—	3,410
16313001	98.800	78.400	6.625	6.000	6.000	98.000	—	4,000
16314001	134.331	118.110	5.512	5.000	5.000	130.984	—	3,600
16315001	170.079	146.850	6.024	5.512	5.512	—	—	8,030
16316001	196.850	173.622	7.000	6.250	6.250	192.716	—	10,100
16317001	218.268	197.244	5.512	5.039	5.039	216.142	—	8,700

*No internal diameters for this type.

XT Series

HOLE DATA						GEAR DATA $\alpha = 20°$						GEAR TOOTH RATING	BEARING MOMENT RATING
OUTER RING			INNER RING										
L_o (in)	n_o	B_o (in)	L_i (in)	n_i	B_i (in)	TOOTH FORM	D_2 (in)	P_d or (m)	z_2	x_2	b_2 (in)	F_z (lbs)	C_{rm} (ft-lbs)
8.188	12	0.354	5.500	12	0.354	FD	9.250	8	74	0	1.141	2,470	6,200
19.156	16	0.813	13.750	18	0.813	FS	21.000	5/7	105	0	2.656	10,570	122,500
27.375	30	0.813	20.625	29	0.813	SD	30.000	3.5	105	0	3.250	17,400	322,000
36.750	36	0.813	31.250	39	0.813	SD	39.000	4	156	0	2.750	14,000	477,000
47.000	30	1.031	40.000	29	1.031	SD	50.000	2.5	125	0	3.620	27,400	832,000
50.375	30	1.062	44.125	36	1.062	SD	53.500	2	107	0	3.000	28,150	875,000
52.000	28	1.313	44.000	28	1.313	SD	55.600	2.5	139	0	3.850	29,300	1,220,000
57.375	40	1.063	49.250	44	1.063	SD	60.500	2	121	0	4.000	40,850	1,522,000
70.250	40	1.313	58.500	40	1.313	FD	74.000	2	148	0	4.000	36,600	2,873,000
80.125	48	1.313	69.250	48	1.313	SD	84.000	1.5	126	0	6.000	81,900	3,575,000
94.250	72	1.562	82.500	60	1.812	SD	98.000	2	196	0	4.750	49,600	4,951,000
128.976	72	1.260	120.512	72	1.260	FD	132.520	(18)	187	.28	4.724	61,800	2,070,000
162.598	72	1.535	150.787	72	1.535	FD	168.504	(20)	214	0	5.512	80,500	4,176,000
189.370	80	1.535	177.559	80	1.535	FD	195.276	(20)	248	0	5.512	81,000	5,210,000
212.598	90	1.260	200.787	90	1.260	FD	217.323	(12)	460	0	3.780	31,100	3,190,000

XT Series Load Charts - No Gear

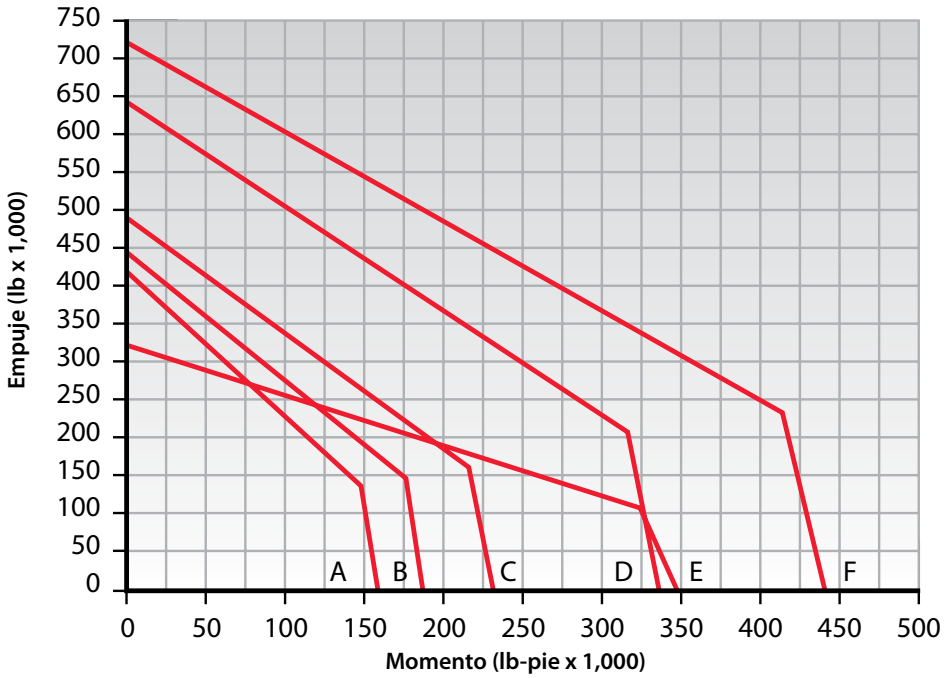

(A) 12740001
(B) 12750001
(C) 12770001
(D) 12775001
(E) 16289001
(F) 12780001

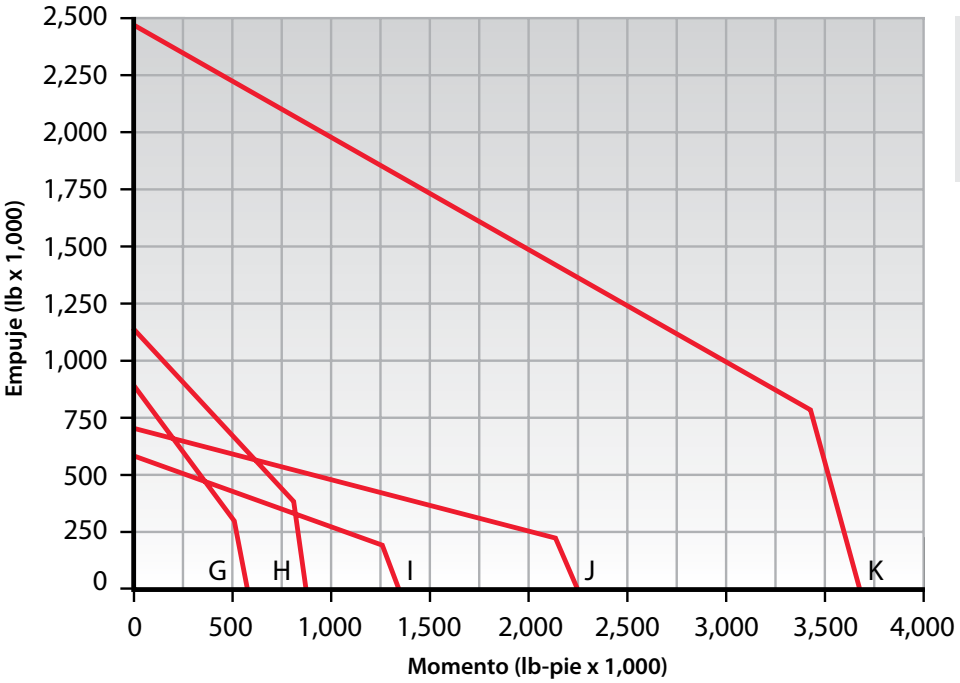

(G) 12785001
(H) 12790001
(I) 16290001
(J) 16291001
(K) 16389001

Rating Charts are only applicable for operating conditions defined as NORMAL OPERATION in Section 2 and when installed and maintained as defined in Section 3 of this catalog. Bearing diameter increase does not necessarily ensure bearing rating increase due to variations in rolling elements, ring section, and fastener complements. For information concerning the basis for development of Rating Charts refer to the LOAD RATING paragraph in Section 2.

XT Series Load Charts - Internal Gear

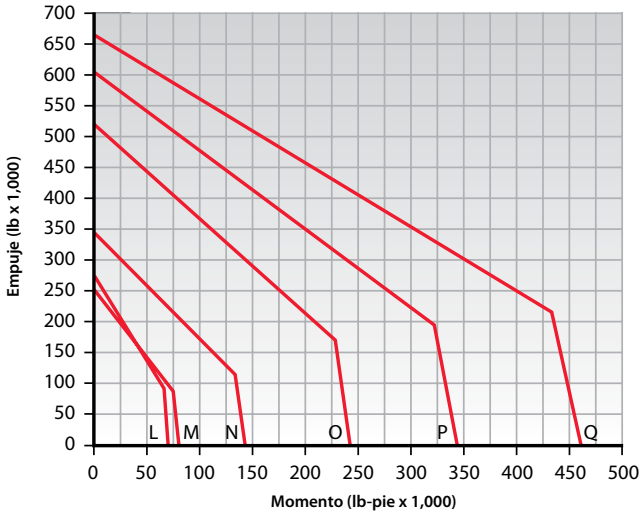

(L) 16292001
(M) 16293001
(N) 16294001
(O) 16295001
(P) 16296001
(Q) 16390001

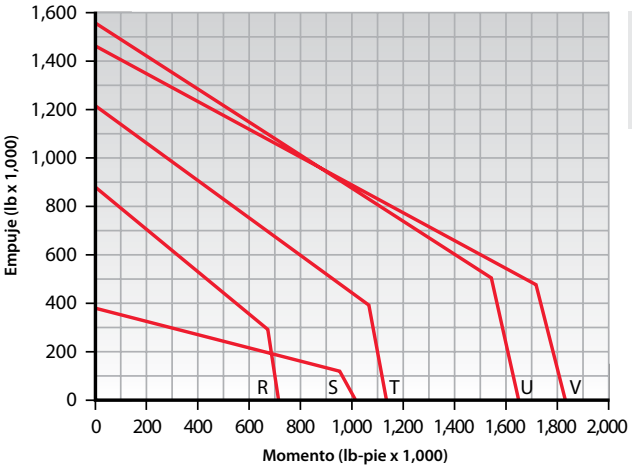

(R) 16374001
(S) 16303001
(T) 16297001
(U) 16298001
(V) 16299001

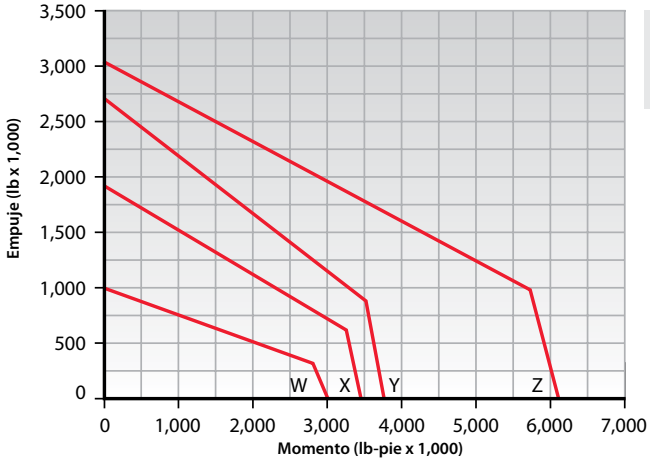

(W) 16304001
(X) 16301001
(Y) 16300001
(Z) 16302001

Rating Charts are only applicable for operating conditions defined as NORMAL OPERATION in Section 2 and when installed and maintained as defined in Section 3 of this catalog. Bearing diameter increase does not necessarily ensure bearing rating increase due to variations in rolling elements, ring section, and fastener complements. For information concerning the basis for development of Rating Charts refer to the LOAD RATING paragraph in Section 2.

XT Series Load Charts - External Gear

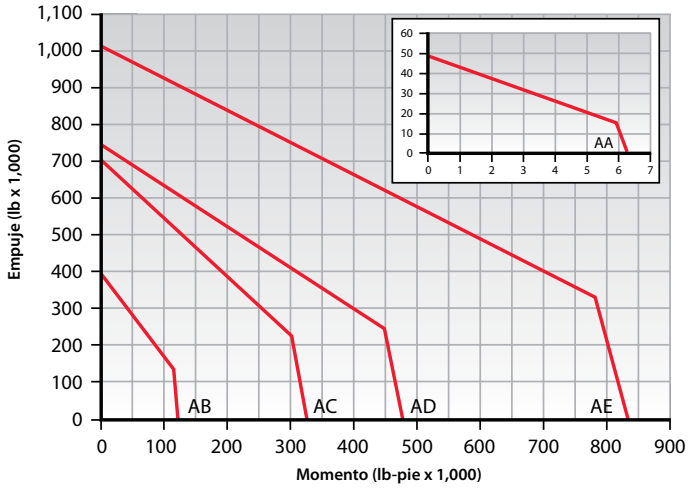

(AA) 16305001
(AB) 16306001
(AC) 16307001
(AD) 12440001
(AE) 16308001

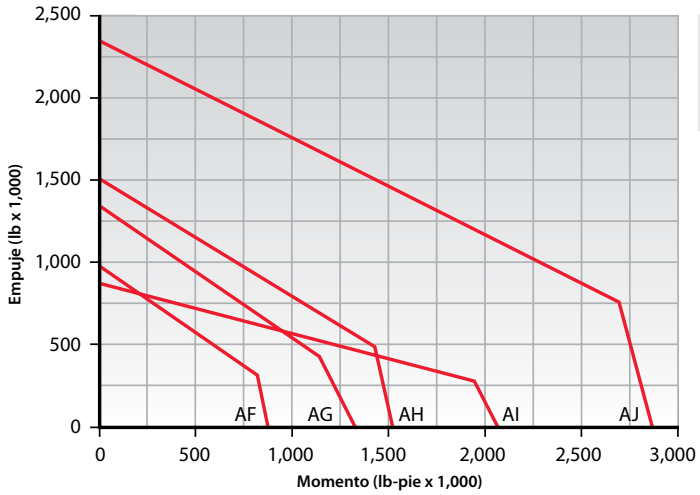

(AF) 12288001
(AG) 16309001
(AH) 16310001
(AI) 16314001
(AJ) 16311001

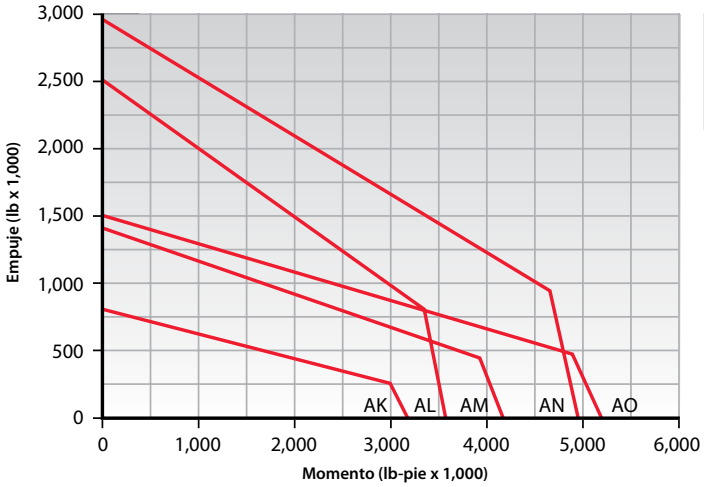

(AK) 16317001
(AL) 16312001
(AM) 16315001
(AN) 16313001
(AO) 16316001

Rating Charts are only applicable for operating conditions defined as NORMAL OPERATION in Section 2 and when installed and maintained as defined in Section 3 of this catalog. Bearing diameter increase does not necessarily ensure bearing rating increase due to variations in rolling elements, ring section, and fastener complements. For information concerning the basis for development of Rating Charts refer to the LOAD RATING paragraph in Section 2.

DT Series



Introduction

The DT Series consists of the eight-point ball bearing Kaydon originally developed to provide maximum load capacity for given envelope and bolt circle diameters. It provides up to 80% increase in capacity over that of a single-row four-point design of the same diameter and bolt circles. Yet the DT Series has a smaller profile than a three-row roller design.

Design Features

The internal configuration consists of two deep groove gothic arch raceways, each with a maximum ball complement, located in both the inner and outer rings. This results in a total of eight surfaces where the balls may contact at any time, providing exceptional moment, thrust, and radial load capacities. Through precise manufacturing, the raceways are closely matched to provide a high degree of load sharing. Integral seals are provided to assist in the exclusion of contaminants.

Availability

DT Series bearings are made to order with a fully customizable hole pattern for bearing retention, and an internal or external gear or other drive mechanism.

Applications

DT Series bearings have been used successfully in heavy duty applications including:

- Large excavators
- Large cranes
- Mining equipment
- Wind turbines
- Telescopes

DT Series

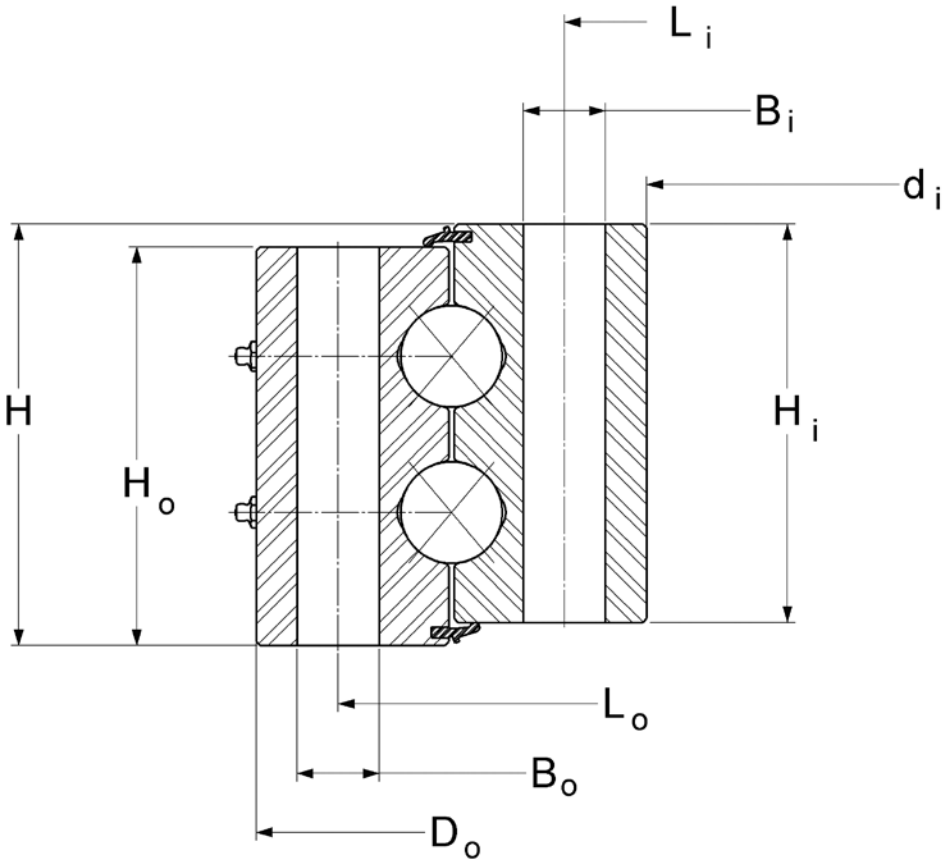

No Gear

Kaydon P/N	OUTLINE DIMENSIONS AND WEIGHT							
	D_o (in)	d_i (in)	H (in)	H_o (in)	H_i (in)	D_r* (in)	d_r* (in)	G APPROX. (lbs)
16282001	20.375	12.250	4.500	4.185	4.185	—	—	210
16283001	29.750	18.620	7.000	6.500	6.551	—	—	645
16284001	41.417	30.236	7.480	6.890	6.890	—	—	1,060
16015001	56.250	43.750	6.750	6.380	6.380	—	—	1,520
16285001	75.750	59.750	8.750	8.375	8.375	—	—	3,540
16286001	131.000	114.000	8.000	7.500	7.500	—	—	6,950
13004001	170.000	150.000	9.875	9.250	9.250	—	—	11,950

*No internal or external diameters for this type.

DT Series

HOLE DATA						GEAR DATA $\alpha = 20°$						GEAR TOOTH RATING	BEARING MOMENT RATING
OUTER RING			INNER RING										
L_o (in)	n_o	B_o (in)	L_i (in)	n_i	B_i (in)	TOOTH FORM	D_2 (in)	P_d or (m)	z_2	x_2	b_2 (in)	F_z (lbs)	C_{rm} (ft-lbs)
18.875	20	0.688	13.625	20	0.688	—	—	—	—	—	—	—	102,500
27.875	34	0.813	20.375	32	0.813	—	—	—	—	—	—	—	363,100
39.449	36	0.866	32.205	36	0.866	—	—	—	—	—	—	—	734,800
53.630	36	1.313	46.380	36	1 1/4-7	—	—	—	—	—	—	—	2,083,600
73.625	48	1.004	62.375	36	1.250	—	—	—	—	—	—	—	2,934,900
127.000	64	1.313	118.000	64	1.313	—	—	—	—	—	—	—	5,666,800
166.000	64	1.625	154.000	64	1.625	—	—	—	—	—	—	—	8,098,000

DT Series

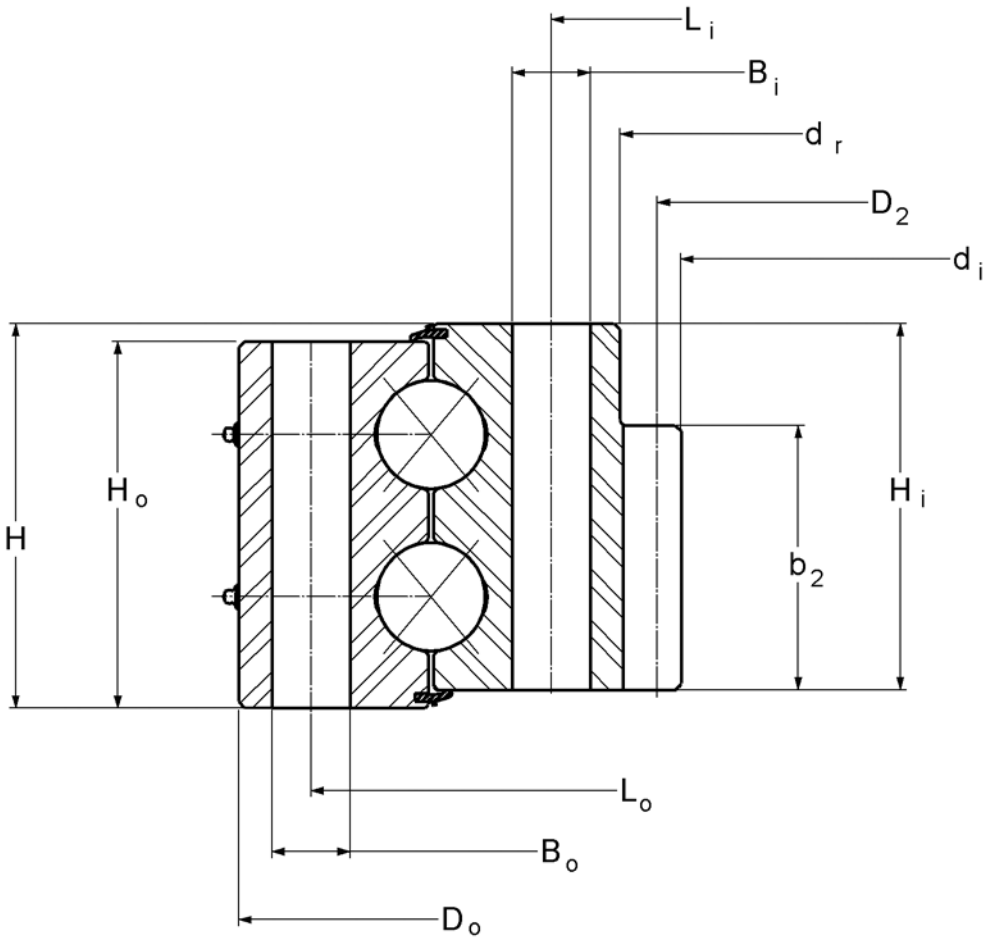

Internal Gear

Kaydon P/N	OUTLINE DIMENSIONS AND WEIGHT							
	D_o (in)	d_i (in)	H (in)	H_o (in)	H_i (in)	D_r* (in)	d_r (in)	G APPROX. (lbs)
16274001	56.693	43.661	5.472	5.118	5.118	—	46.142	1,200
16275001	66.000	47.600	8.000	7.625	7.625	—	50.125	2,820
16276001	70.500	50.200	8.625	8.312	8.312	—	52.125	3,700
16277001	81.890	65.248	5.591	5.197	5.197	—	67.520	2,460
16278001	94.173	77.008	7.126	6.732	6.732	—	79.291	3,410
16279001	109.375	87.170	9.312	8.937	8.000	—	87.170	7,100
16280001	121.000	98.400	8.750	8.438	8.438	—	102.250	7,440
16281001	141.000	114.941	11.180	10.000	10.430	—	120.710	14,850

*No external diameters for this type.

DT Series

HOLE DATA						GEAR DATA $\alpha = 20°$						GEAR TOOTH RATING	BEARING MOMENT RATING
OUTER RING			INNER RING										
L_o (in)	n_o	B_o (in)	L_i (in)	n_i	B_i (in)	TOOTH FORM	D_2 (in)	P_d or (m)	z_2	x_2	b_2 (in)	F_z (lbs)	C_{rm} (ft-lbs)
54.724	48	0.866	48.425	48	0.866	FD	44.094	(14)	80	-.5	4.134	48,640	1,225,400
63.000	42	1.625	53.000	45	1.625	SD	48.667	1.5	73	0	5.500	78,680	3,921,100
67.625	36	1 1/2-6	55.000	40	1.625	SD	51.000	2	102	0	5.000	56,400	4,863,400
78.740	54	1.299	70.866	54	1.299	FD	65.669	(12)	139	-.5	3.937	41,140	2,534,900
90.787	60	1.535	82.677	60	1.535	FD	77.480	(12)	164	-.5	3.937	40,770	3,896,200
102.953	66	1.593	93.504	66	1.593	FD	87.874	(18)	124	-.5	6.000	94,870	9,075,400
117.000	72	1.625	105.000	72	1.625	FD	100.000	1.25	125	0	6.000	106,940	8,751,800
133.661	90	1.625	124.252	90	1.625	FD	116.221	(18)	165	-.5	10.000	155,340	12,625,000

DT Series

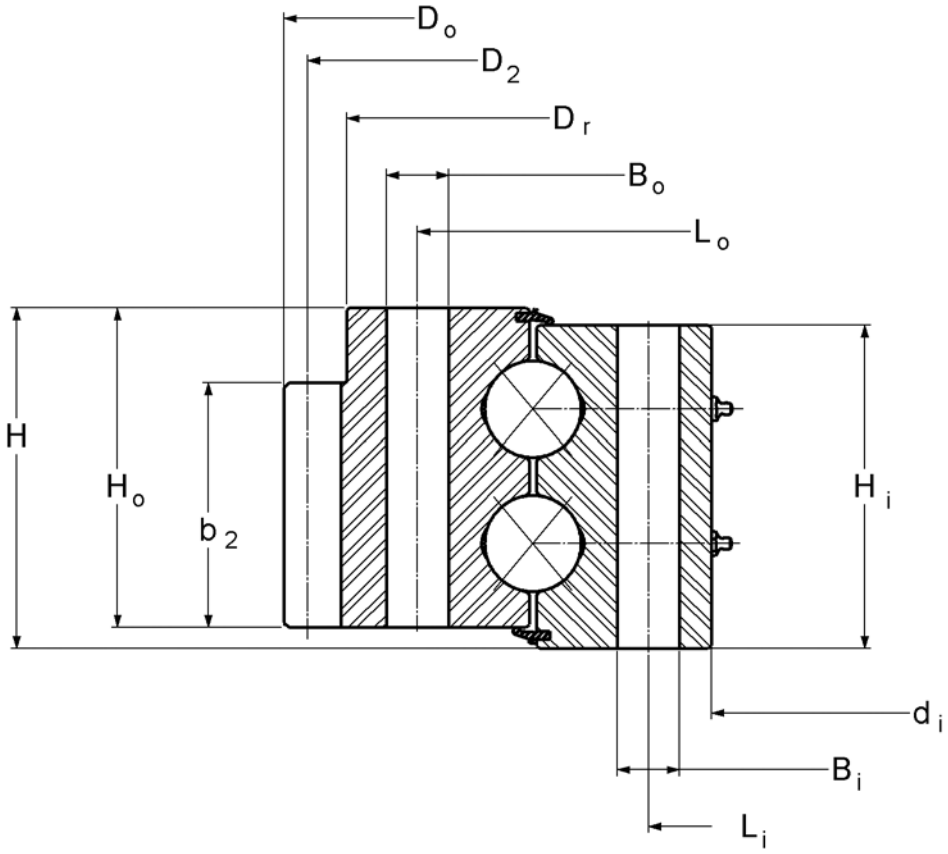

External Gear

Kaydon P/N	OUTLINE DIMENSIONS AND WEIGHT							
	D_o (in)	d_i (in)	H (in)	H_o (in)	H_i (in)	D_r (in)	d_r* (in)	G APPROX. (lbs)
16258001	17.086	10.250	3.313	3.000	3.000	17.086	—	105
16264001	50.016	38.504	5.512	5.157	4.567	48.425	—	870
16265001	56.240	41.370	7.125	6.688	6.688	54.675	—	1,730
16266001	68.800	51.250	7.375	6.875	7.000	68.800	—	2,850
16267001	75.394	58.500	6.110	5.750	5.750	73.307	—	2,450
16268001	89.181	71.400	7.090	6.650	6.730	96.566	—	3,360
16269001	94.742	72.250	9.125	8.375	8.750	92.500	—	5,560
16270001	102.992	84.134	7.205	6.654	6.654	99.331	—	3,970
16271001	124.800	98.375	11.250	9.375	10.750	124.800	—	10,500
16272001	143.800	114.000	11.062	10.250	10.437	143.800	—	14,980
16273001	180.000	150.000	10.625	10.000	10.000	175.250	—	22,100

*No internal diameters for this type.

DT Series

HOLE DATA						GEAR DATA $\alpha = 20°$						GEAR TOOTH RATING	BEARING MOMENT RATING
OUTER RING			INNER RING										
L_o (in)	n_o	B_o (in)	L_i (in)	n_i	B_i (in)	TOOTH FORM	D_2 (in)	P_d or (m)	z_2	x_2	b_2 (in)	F_z (lbs)	C_{rm} (ft-lbs)
15.354	18	0.563	11.614	24	0.563	FS	16.800	5/7	84	0	1.750	6,850	65,200
46.496	42	M24x3	40.551	48	1.024	FD	49.134	(8)	156	+.5	3.346	19,390	970,400
52.000	30	1.313	44.000	30	1.313	SD	55.600	2.5	139	0	4.000	30,480	2,132,100
64.250	36	1.438	55.000	42	1.438	FD	68.000	2	136	0	4.000	36,480	3,470,900
70.500	48	1.313	61.366	48	1.313	FD	74.016	(10)	188	+.8	4.130	31,400	3,335,700
83.622	60	1.299	74.016	60	1.299	FD	87.638	(14)	159	+.5	5.080	53,760	4,793,200
89.750	60	1.625	75.250	68	1.625	SD	94.000	2	188	0	5.500	55,490	8,669,000
95.906	64	1.299	87.205	68	1.535	FD	100.787	(20)	128	+.5	5.709	92,060	3,658,500
117.625	72	1.875	103.625	72	1.875	FD	123.200	1.25	154	0	6.000	86,780	14,639,200
136.625	72	2.156	121.375	72	2.156	SD	143.000	2	286	0	8.000	85,120	18,293,300
170.000	80	1.875	156.250	80	1.875	FD	178.000	1	178	0	7.000	129,080	18,000,000

DT Series Load Charts – No Gear

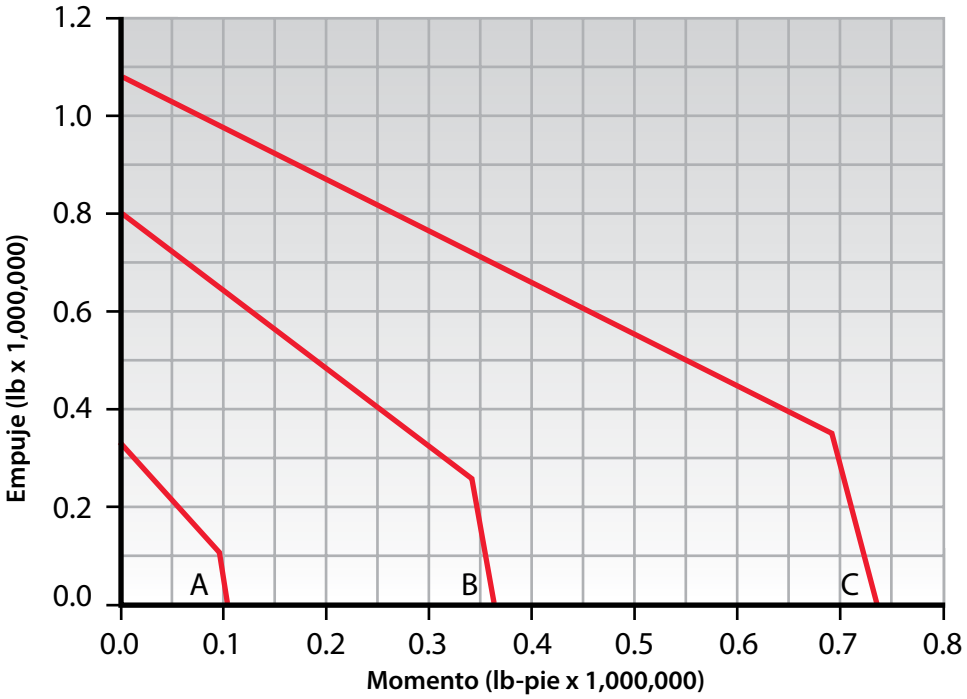

(A) 16282001
(B) 16283001
(C) 16284001

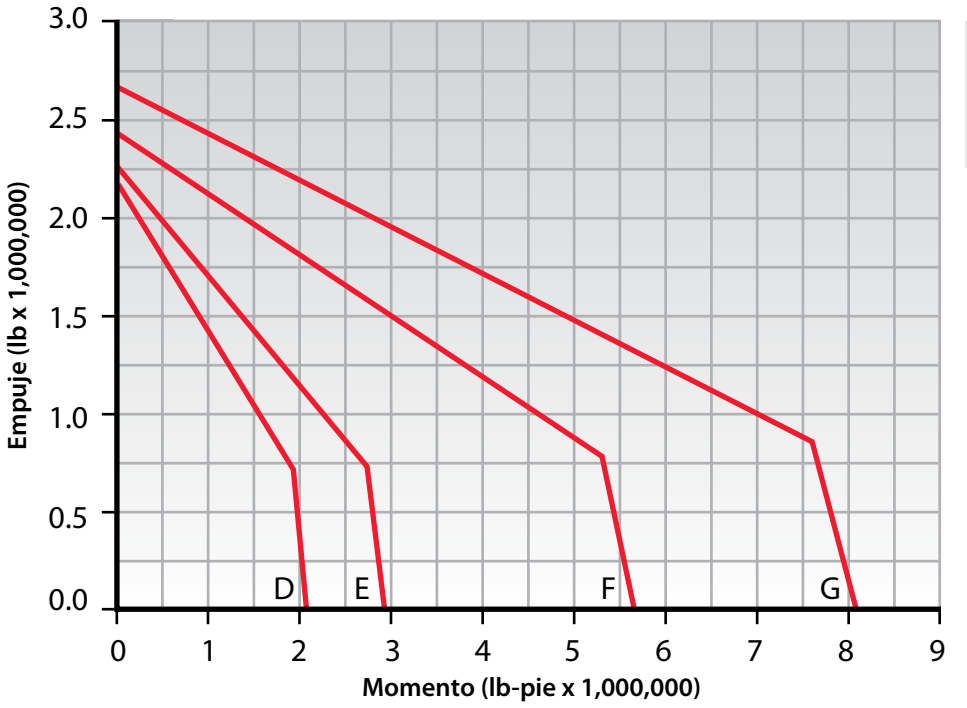

(D) 16015001
(E) 16285001
(F) 16286001
(G) 13004001

Rating Charts are only applicable for operating conditions defined as NORMAL OPERATION in Section 2 and when installed and maintained as defined in Section 3 of this catalog. Bearing diameter increase does not necessarily ensure bearing rating increase due to variations in rolling elements, ring section, and fastener complements. For information concerning the basis for development of Rating Charts refer to the LOAD RATING paragraph in Section 2.

DT Series Load Charts – Internal Gear

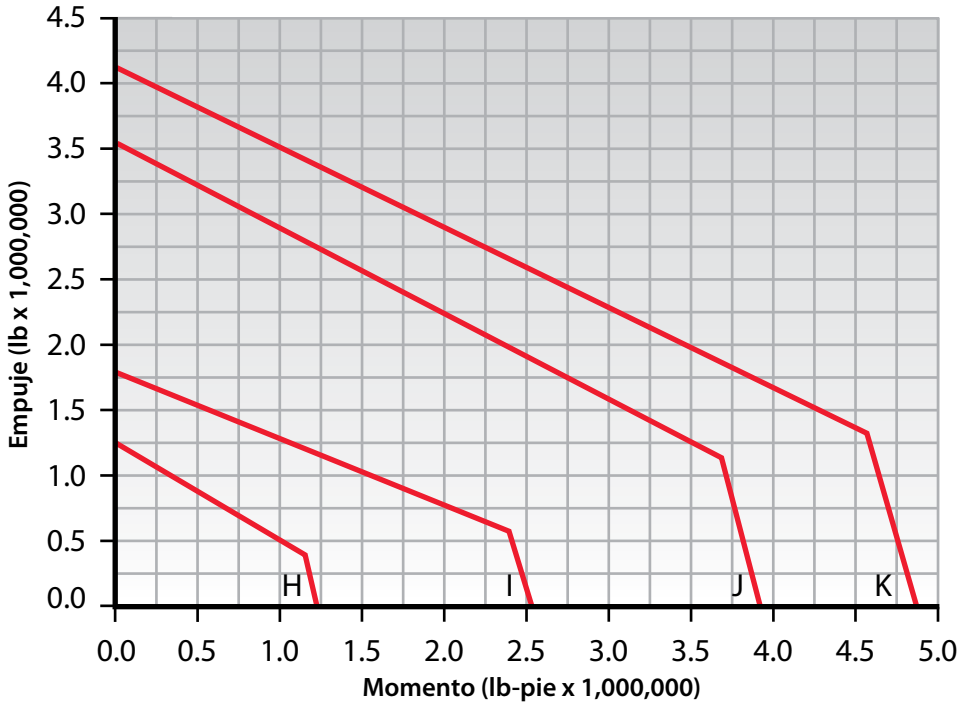

(H) 16274001
(I) 16277001
(J) 16275001
(K) 16276001

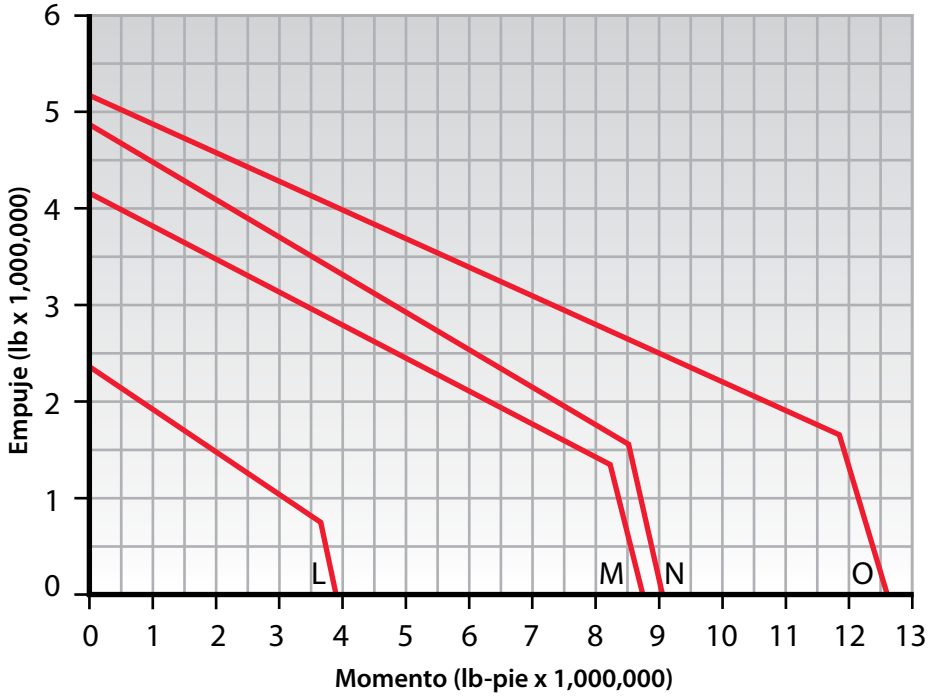

(L) 16278001
(M) 16280001
(N) 16279001
(O) 16281001

Rating Charts are only applicable for operating conditions defined as NORMAL OPERATION in Section 2 and when installed and maintained as defined in Section 3 of this catalog. Bearing diameter increase does not necessarily ensure bearing rating increase due to variations in rolling elements, ring section, and fastener complements. For information concerning the basis for development of Rating Charts refer to the LOAD RATING paragraph in Section 2.

DT Series Load Charts – External Gear

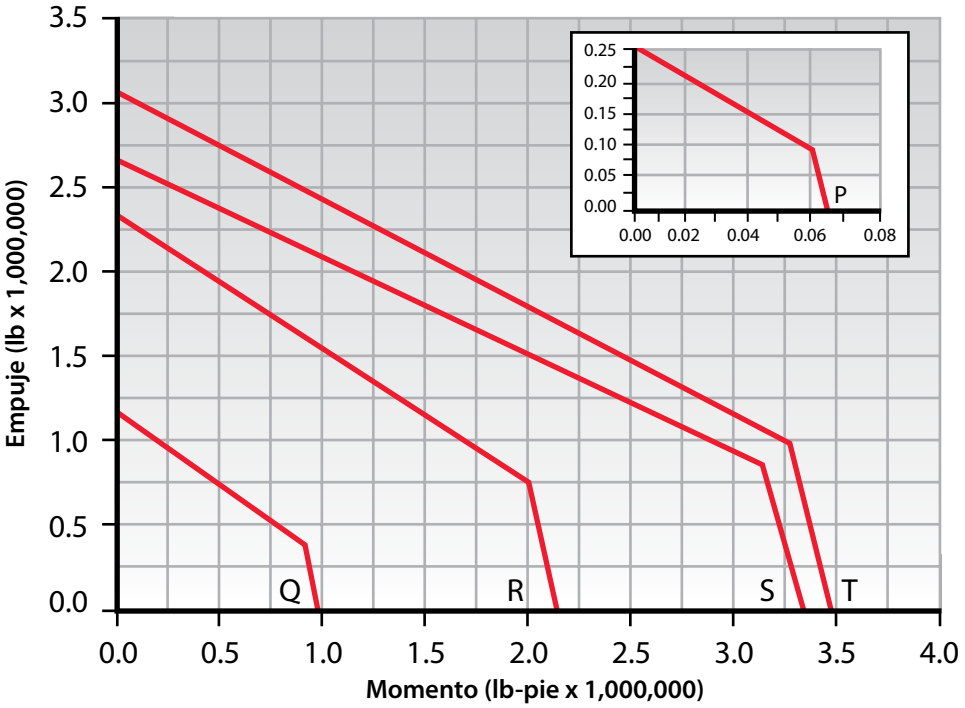

(P) 16258001
(Q) 16264001
(R) 16265001
(S) 16267001
(T) 16266001

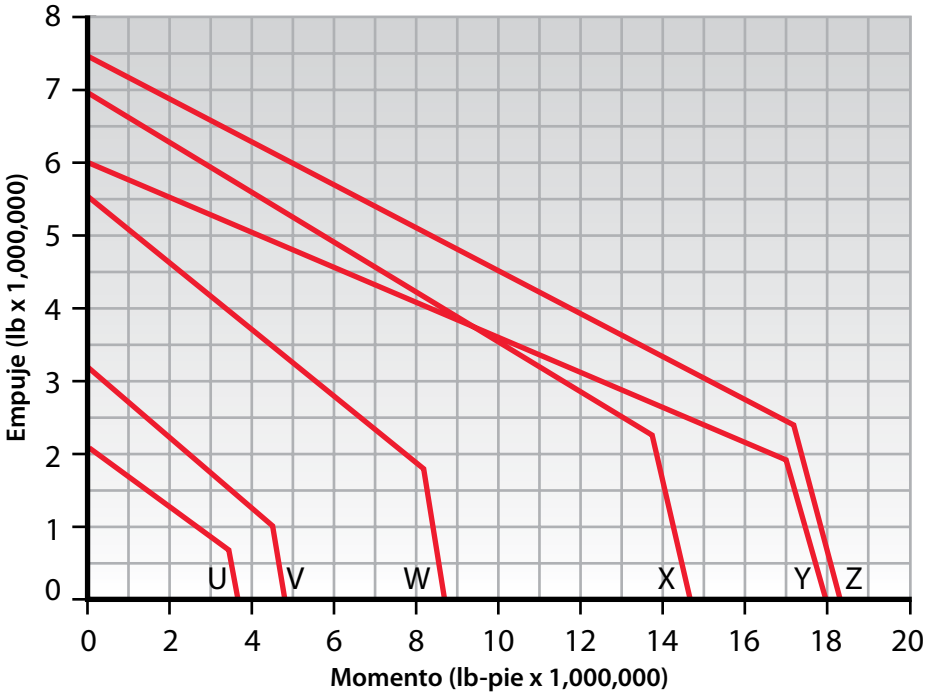

(U) 16270001
(V) 16268001
(W) 16269001
(X) 16271001
(Y) 16273001
(Z) 16272001

Rating Charts are only applicable for operating conditions defined as NORMAL OPERATION in Section 2 and when installed and maintained as defined in Section 3 of this catalog. Bearing diameter increase does not necessarily ensure bearing rating increase due to variations in rolling elements, ring section, and fastener complements. For information concerning the basis for development of Rating Charts refer to the LOAD RATING paragraph in Section 2.

XR Series

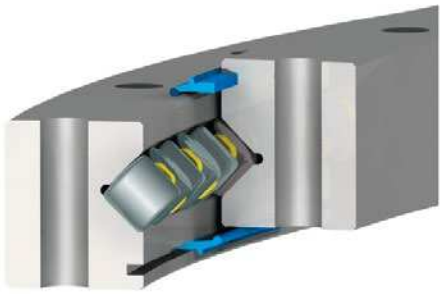

Introduction

The XR Series consists of Kaydon cross roller bearings. They provide a high degree of stiffness and low rotational torque within a minimal envelope. This design should be considered when a four-point contact ball bearing does not meet the operating performance requirements for torque and stiffness.

Design Features

The internal configuration consists of cylindrical rollers in a v-shaped groove in each ring. The rollers are oriented with alternating axes of rotation. Positioned in this manner, the bearing accepts all combinations of radial, thrust, and moment loads. Rotational torque is less than a four-point contact ball design because each roller only transmits load in a single direction, and the greater contact area and geometry of a roller versus a ball provides a higher degree of stiffness and rigidity.

A roller of approximately the same size as a ball has greater load-carrying ability. However, because not all the rollers are oriented in one direction, their thrust and moment load capacity is less than that of a four-point ball bearing.

Gear teeth or other drive mechanisms can be provided on the inner or outer support ring, and your choice of hole pattern can be added for bearing retention.

Availability

XR Series bearings are custom manufactured to fit the design and specification.

Applications

XR Series bearings have been used successfully in applications requiring extra stiffness with a low torque requirement including:

- Radar
- Military turrets
- Machine tools
- Tunnel boring machines

XR Series

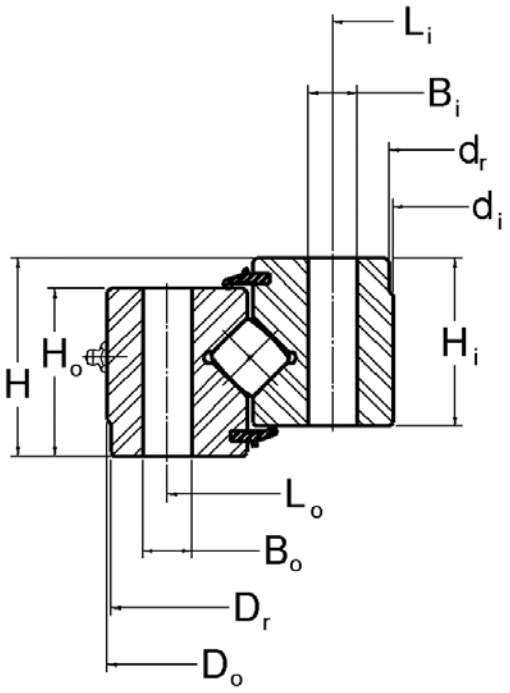

No Gear

Kaydon P/N	OUTLINE DIMENSIONS AND WEIGHT								HOLE DATA					
									OUTER RING			INNER RING		
	D_o (in)	d_i (in)	H (in)	H_o (in)	H_i (in)	D_r (in)	d_r (in)	G APPROX. (lbs)	L_o (in)	n_o	B_o (in)	L_i (in)	n_i	B_i (in)
16318001	11.811	5.512	1.417	1.181	1.181	—	—	30	10.630	6	M16x2	6.693	6	M16x2
16319001	15.886	9.055	2.165	1.772	1.850	—	—	65	14.094	24	0.512	10.197	24	0.512
16320001	27.362	18.779	3.031	2.520	2.244	27.283	18.897	185	25.197	28	0.709	20.000	28	0.709
16321001	35.312	26.625	2.953	2.863	2.863	35.251	26.750	325	34.000	24	1/2-13	29.000	24	0.590
16322001	46.250	34.250	4.250	3.880	3.880	—	34.380	765	44.000	28	1-8	36.250	28	1.063
16323001	56.380	46.770	3.820	3.470	3.430	56.295	46.850	710	40.000	36	0.813	33.875	36	3/4-16
16324001	85.000	74.000	3.750	3.250	3.250	84.880	74.120	1,190	83.000	42	0.938	76.000	42	0.938
16325001	95.000	82.000	4.000	3.500	3.500	94.875	82.063	1,660	93.000	48	1.063	85.000	48	1.063
16326001	131.890	112.205	7.874	6.496	7.087	131.250	120.866	6,500	127.559	40	M36x3	116.535	40	1.496
16327001	158.661	140.945	8.819	6.654	6.654	—	—	6,400	155.315	92	1.654	144.291	92	1.654

Note: Capacities are dynamic and based on an L_{10} life of 1 million revolutions per ABMA Std 11-1990. Values listed do not apply simultaneously. Ring cross section and bolted joint configuration used may result in lower bearing capacity ratings.

XR Series

GEAR DATA $\alpha = 20°$						GEAR TOOTH RATING F_z	DYNAMIC CAPACITIES 1 MILLION REVOLUTIONS L_{10} LIFE		
TOOTH FORM	D_2 (in)	P_d or (m)	z_2	x_2	b_2 (in)	(lbs)	RADIAL (lbs)	THRUST (lbs)	MOMENT (ft-lbs)
—	—	—	—	—	—	—	19,150	22,340	7,530
—	—	—	—	—	—	—	36,850	42,830	20,140
—	—	—	—	—	—	—	64,560	73,730	65,660
—	—	—	—	—	—	—	81,310	91,980	116,170
—	—	—	—	—	—	—	235,420	270,010	425,900
—	—	—	—	—	—	—	209,680	237,380	482,960
—	—	—	—	—	—	—	267,330	300,410	956,430
—	—	—	—	—	—	—	362,100	407,250	1,450,300
—	—	—	—	—	—	—	762,050	858,130	4,185,500
—	—	—	—	—	—	—	723,870	812,130	4,879,900

XR Series

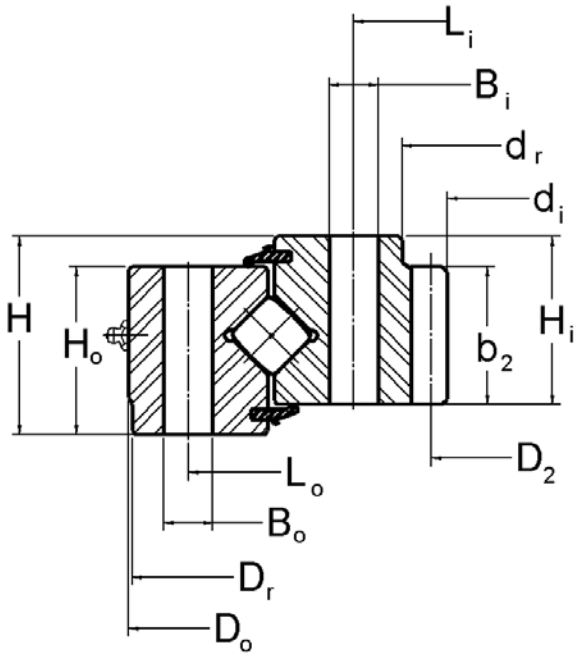

Internal Gear

Kaydon P/N	OUTLINE DIMENSIONS AND WEIGHT								HOLE DATA					
									OUTER RING			INNER RING		
	D_o (in)	d_i (in)	H (in)	H_o (in)	H_i (in)	D_r (in)	d_r (in)	G APPROX. (lbs)	L_o (in)	n_o	B_o (in)	L_i (in)	n_i	B_i (in)
16328001	26.700	18.667	2.500	2.000	2.000	—	—	130	24.500	18	1/2-13	20.500	18	1/2-13
16329001	36.000	24.160	3.880	3.380	3.380	—	—	465	33.250	24	0.813	27.250	30	3/4-10
16330001	41.500	30.320	4.190	3.370	4.000	—	32.360	510	40.000	36	0.807	33.500	36	3/4-16
16331001	41.970	30.828	3.350	2.560	2.950	41.929	—	400	39.961	24	M20x2.5	34.646	24	M20x2.5
16332001	54.740	44.400	4.500	3.750	4.130	—	46.380	500	53.000	36	0.922	48.000	36	7/8-14
16333001	78.819	62.913	5.906	4.921	4.921	—	65.157	2,050	76.575	48	1.181	67.520	48	1.181
16334001	114.000	95.000	6.000	5.500	5.500	—	97.500	4,250	111.000	48	1.063	100.000	48	1-8
16335001	121.496	97.717	6.772	6.299	6.299	—	—	6,080	117.795	72	1.535	105.512	72	1.535
16336001	142.000	123.200	6.000	5.500	5.500	—	—	5,370	139.000	72	1.063	128.000	72	1.063

Note: Capacities are dynamic and based on an L_{10} life of 1 million revolutions per ABMA Std 11-1990. Values listed do not apply simultaneously. Ring cross section and bolted joint configuration used may result in lower bearing capacity ratings.

XR Series

GEAR DATA α = 20°						GEAR TOOTH RATING F_z	DYNAMIC CAPACITIES 1 MILLION REVOLUTIONS L_{10} LIFE		
TOOTH FORM	D_2 (in)	P_d or (m)	z_2	x_2	b_2 (in)	(lbs)	RADIAL (lbs)	THRUST (lbs)	MOMENT (ft-lbs)
FD	19.000	6	114	0	2.000	6,345	64,620	73,810	65,430
SD	24.800	2.5	62	0	3.380	27,300	157,900	181,900	213,180
FD	30.800	2.5	77	-.400	3.500	27,600	220,820	254,250	362,220
FD	31.102	(10)	79	-.625	2.950	22,820	125,790	142,740	211,160
FD	45.200	2.5	113	0	3.750	28,600	205,410	232,690	460,450
FD	63.307	(12)	134	-.500	4.528	40,350	406,070	459,660	1,315,740
FD	96.000	2	192	0	5.000	54,550	500,930	563,230	2,389,570
FD	98.268	(24)	104	-.708	6.299	134,270	755,820	854,030	3,797,780
SD	124.000	2	248	0	5.500	50,440	675,310	758,460	4,057,130

XR Series

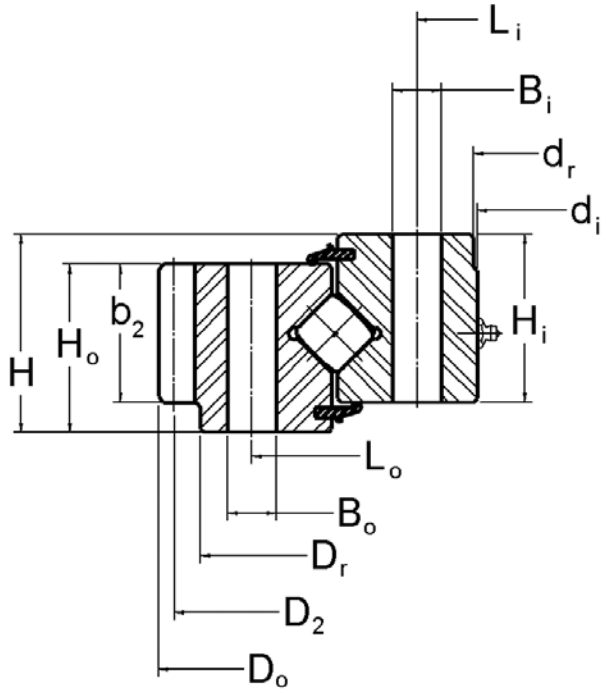

External Gear

Kaydon P/N	OUTLINE DIMENSIONS AND WEIGHT								HOLE DATA					
									OUTER RING			INNER RING		
	D_o (in)	d_i (in)	H (in)	H_o (in)	H_i (in)	D_r (in)	d_r (in)	G APPROX. (lbs)	L_o (in)	n_o	B_o (in)	L_i (in)	n_i	B_i (in)
16337001	16.000	9.190	2.170	1.770	1.850	14.880	9.250	55	14.094	24	0.562	10.197	24	0.562
16338001	23.333	13.750	2.750	2.500	2.500	—	—	175	20.875	12	0.688	15.375	12	0.688
16339001	27.362	18.780	3.030	2.520	2.240	26.380	18.900	180	25.197	18	0.688	20.000	18	0.688
16340001	33.627	26.535	2.205	1.752	1.752	—	—	140	30.906	36	M12x1.75	27.480	40	0.551
16341001	36.333	24.500	4.690	4.310	3.880	35.500	24.625	580	33.625	24	0.813	26.125	24	0.813
16342001	45.050	34.180	3.930	3.360	3.470	42.840	34.250	470	41.338	24	0.866	35.826	24	0.866
16343001	51.040	40.000	4.000	3.500	3.500	—	—	680	48.200	36	0.813	41.800	36	0.813
16344001	63.150	47.480	5.118	4.409	4.409	61.063	47.559	1,420	58.819	36	1.023	50.394	36	1.023
16345001	70.510	53.540	5.040	4.330	4.330	—	—	1,460	65.354	42	1.063	55.906	42	1.063
16346001	85.866	75.250	3.300	2.800	2.800	—	—	920	82.750	48	0.813	77.250	48	0.813
16347001	100.667	84.000	6.500	6.500	4.000	98.750	84.250	3,240	95.000	48	1-8	87.000	48	1.063
16348001	159.843	141.732	6.142	5.748	5.748	—	—	5,480	154.528	100	1.299	144.685	100	1.299
16393001	209.843	188.583	7.047	6.417	6.024	206.299	188.858	9,750	202.362	100	1.299	191.339	100	1.299

Note: Capacities are dynamic and based on an L_{10} life of 1 million revolutions per ABMA Std 11-1990. Values listed do not apply simultaneously. Ring cross section and bolted joint configuration used may result in lower bearing capacity ratings.

XR Series

GEAR DATA $\alpha = 20°$						GEAR TOOTH RATING F_z	DYNAMIC CAPACITIES 1 MILLION REVOLUTIONS L_{10} LIFE		
TOOTH FORM	D_2 (in)	P_d or (m)	z_2	x_2	b_2 (in)	(lbs)	RADIAL (lbs)	THRUST (lbs)	MOMENT (ft-lbs)
FD	15.600	5	78	0	1.460	4,320	24,130	27,780	13,190
FD	23.000	6	138	0	2.500	7,430	85,170	99,260	69,470
FD	26.969	(5)	137	0	1.650	5,725	64,560	73,730	65,660
FD	33.071	(8)	105	0	1.752	9,130	58,790	66,360	77,600
FD	36.000	6	216	0	4.000	12,700	204,020	236,880	274,290
FD	43.701	(10)	111	+.713	2.580	15,490	128,480	145,650	223,060
SD	50.400	2.5	126	0	3.500	24,380	195,710	222,290	396,330
FD	61.811	(10)	157	+.750	3.346	20,640	350,400	399,710	861,070
FD	68.346	(14)	124	+1.150	4.330	36,690	293,690	332,590	801,340
SD	85.333	3	256	0	2.800	18,280	190,740	213,890	686,710
FD	100.000	3	300	0	6.000	32,030	376,230	422,960	1,557,670
FD	158.110	(16)	251	+.500	5.748	67,650	724,030	812,320	4,874,640
FD	206.929	(18)	292	+1.150	6.102	81,360	1,005,010	1,126,290	8,903,140





TR Series

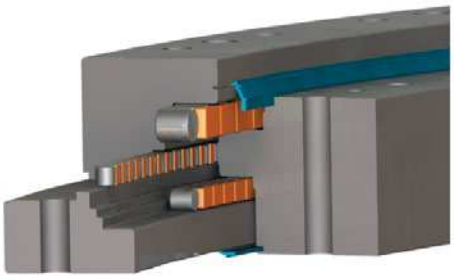

The TR Series consists of three-row roller bearings which offer the highest capacity for a given diameter. When an XR or DT Series bearing doesn't meet the stiffness and capacity requirements, consider the TR Series.

Design Features

The bearing has three independent rows of rollers oriented normal to the direction of loads being transmitted through the bearing. Their orientation is selected to optimize capacity, provide low frictional resistance and minimize deflection.

The top and bottom rows of rollers transmit any opposing thrust loads and combine to transmit any moment loading, while the middle row transmits any radial loads. The rollers, the separator configuration used for each and the mating raceways are sized to meet load or other application requirements.

In order to obtain these performance benefits, the supporting structures must satisfy higher stiffness and lower flatness requirements than those for similar sized XT or DT Series bearings.

Gear teeth or other drive mechanisms can be provided on the inner or outer support ring, and the choice of hole pattern can be added for bearing retention.

Availability

TR Series bearings are custom manufactured to fit the design and specification.

Applications

TR Series bearings have been used successfully in heavy duty applications requiring extra stiffness and capacity including:

- Radar
- Cranes
- Mining shovels
- Stackers and reclaimers
- Heavy mill equipment
- Tunnel boring machines

TR Series

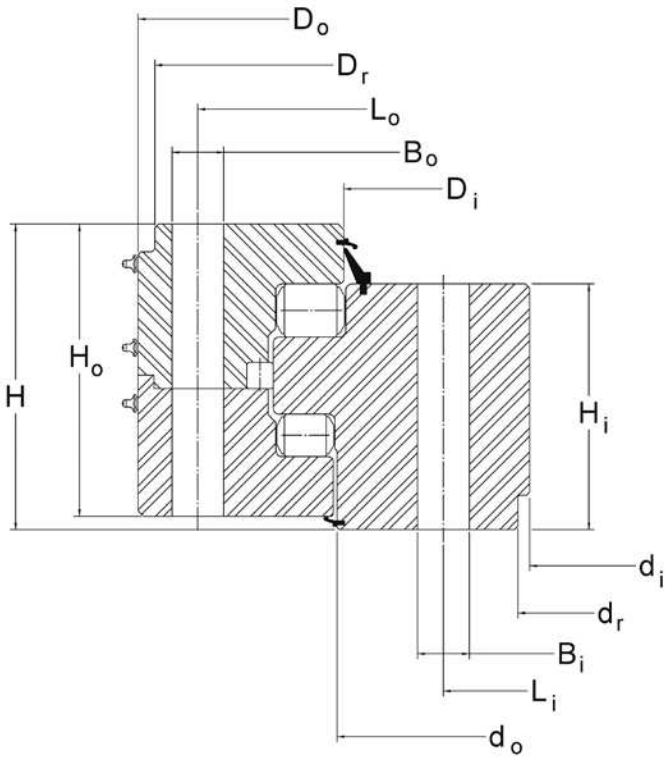

No Gear

Kaydon P/N	OUTLINE DIMENSIONS AND WEIGHT									
	D_o (in)	d_i (in)	H (in)	H_o (in)	H_i (in)	D_r (in)	D_i (in)	d_o (in)	d_r (in)	G APPROX. (lbs)
16349001	48.560	33.000	7.300	6.880	6.380	48.500	39.310	39.710	33.120	1,700
16350001	56.890	41.535	8.661	8.150	6.772	—	47.215	47.563	—	2,450
16351001	77.250	59.880	7.550	7.000	7.120	77.125	69.410	70.420	60.000	3,400
16352001	93.000	72.500	9.050	8.630	8.620	—	80.960	81.410	—	5,630
16353001	118.583	97.638	7.677	7.283	6.102	—	107.087	107.402	—	6,280
16354001	122.480	107.638	5.945	5.472	4.646	—	113.780	113.976	—	3,500
16356001	158.000	136.500	9.000	8.500	7.250	—	146.280	146.080	—	10,100
16387001	207.480	187.795	8.819	8.425	8.425	—	198.622	199.055	—	13,200
16366001	236.220	210.236	12.205	9.842	11.811	—	225.433	224.409	—	25,800

TR Series

HOLE DATA						GEAR DATA						GEAR TOOTH RATING	BEARING MOMENT RATING
OUTER RING			INNER RING			$\alpha = 20°$							
L_o (in)	n_o	B_o (in)	L_i (in)	n_i	B_i (in)	TOOTH FORM	D_2 (in)	P_d or (m)	z_2	x_2	b_2 (in)	F_z (lbs)	C_{rm} (ft-lbs)
46.000	32	1.313	36.000	32	1 1/4-7	—	—	—	—	—	—	—	1,104,700
54.843	48	1.024	43.583	48	1.024	—	—	—	—	—	—	—	1,275,900
74.500	44	1.250	62.500	44	1.250	—	—	—	—	—	—	—	2,332,400
89.500	60	1.625	76.000	60	1.625	—	—	—	—	—	—	—	6,404,300
115.039	72	1.535	101.181	72	1.535	—	—	—	—	—	—	—	7,936,000
119.882	66	1.299	110.236	66	1.299	—	—	—	—	—	—	—	6,653,000
154.000	100	1.563	140.500	100	1.563	—	—	—	—	—	—	—	20,124,000
202.756	120	1.535	190.945	120	1.535	—	—	—	—	—	—	—	32,339,000
231.102	120	1.772	215.354	120	1.772	—	—	—	—	—	—	—	49,976,000

TR Series

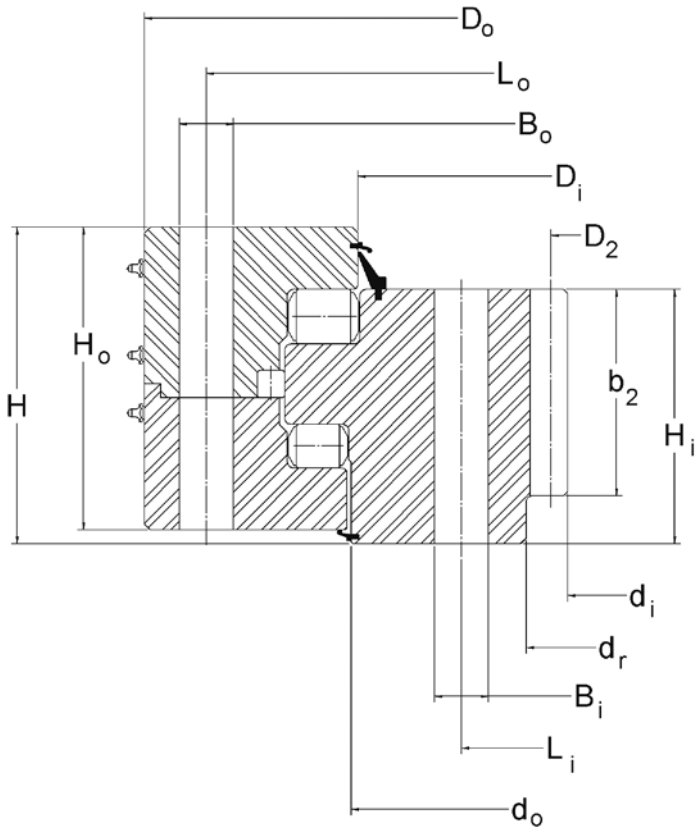

Internal Gear

Kaydon P/N	OUTLINE DIMENSIONS AND WEIGHT									
	D_o (in)	d_i (in)	H (in)	H_o (in)	H_i (in)	D_r* (in)	D_i (in)	d_o (in)	d_r (in)	G APPROX. (lbs)
16376001	54.530	41.760	4.720	4.410	3.700	—	48.150	48.390	43.380	950
16377001	64.173	46.850	7.874	7.283	6.299	—	54.803	54.567	—	2,650
16378001	70.500	50.200	8.620	8.120	6.750	—	59.800	60.220	52.250	3,550
16379001	87.244	68.032	6.969	6.772	5.315	—	77.764	78.112	71.102	3,460
16380001	108.189	85.433	8.504	8.150	6.850	—	97.126	96.339	88.150	6,000
16381001	120.866	97.008	13.701	10.157	11.732	—	108.740	109.291	97.008	10,820
16382001	125.620	106.333	8.380	6.810	6.880	—	115.280	115.630	—	5,800
16383001	155.512	131.339	9.055	8.661	7.284	—	143.307	143.701	133.701	10,550
16384001	187.402	162.992	9.252	8.858	7.480	—	175.158	175.591	—	14,200
16385001	228.000	198.000	11.750	11.250	9.250	—	213.630	214.130	203.000	24,950

*No external diameters for this type.

TR Series

HOLE DATA						GEAR DATA						GEAR TOOTH RATING	BEARING MOMENT RATING
OUTER RING			INNER RING			$\alpha = 20°$							
L_o (in)	n_o	B_o (in)	L_i (in)	n_i	B_i (in)	TOOTH FORM	D_2 (in)	P_d or (m)	z_2	x_2	b_2 (in)	F_z (lbs)	C_{rm} (ft-lbs)
52.953	36	1.024	45.079	36	1.024	SD	42.400	2.5	106	0	3.390	28,250	896,700
61.811	48	1.024	50.551	48	1.024	FD	46.850	(10)	119	-0.75	6.299	55,480	1,479,900
67.625	48	1 1/2-6	55.000	48	1.563	SD	51.000	2	102	0	5.000	56,440	3,514,400
84.646	60	1.299	73.819	60	1.299	FD	68.661	(16)	109	-0.5	4.252	60,240	4,250,900
104.646	80	1.772	91.890	80	1.772	FD	85.984	(14)	156	-0.5	4.724	57,210	9,038,400
117.717	72	1.535	104.724	72	1.535	FD	97.874	(22)	113	-0.5	8.000	143,850	10,642,000
122.812	72	1.563	112.250	72	1 1/2-6	FD	107.333	1.5	161	-0.25	6.880	93,140	9,275,100
151.969	96	1.535	137.402	96	1.535	FD	132.284	(12)	280	0	5.906	59,840	18,616,000
183.858	90	1.535	169.882	90	1.535	FD	164.567	(20)	209	0	7.480	128,000	28,772,000
224.000	150	1.563	207.000	150	1.563	FD	200.000	1	200	0	6.000	130,700	43,823,000

TR Series

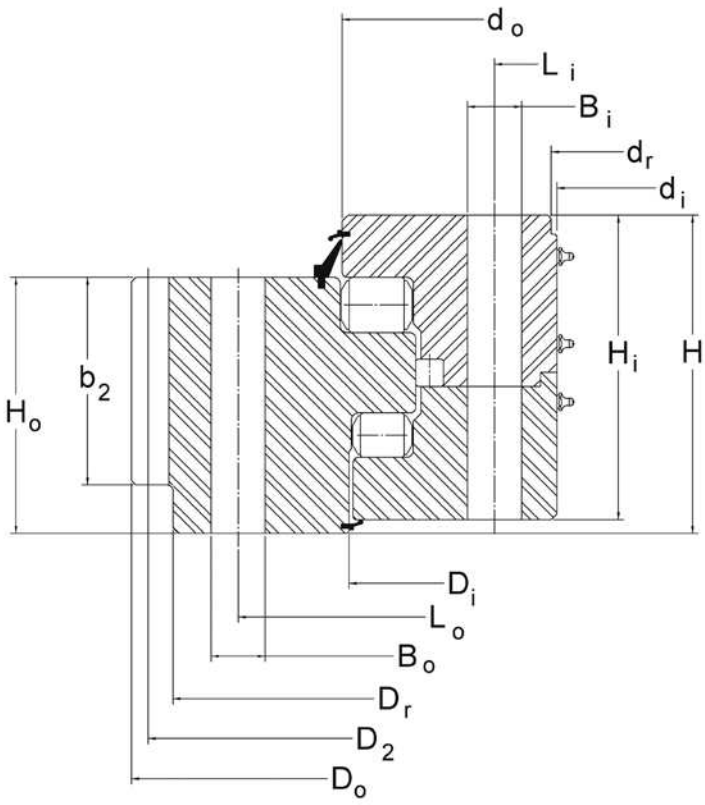

External Gear

Kaydon P/N	OUTLINE DIMENSIONS AND WEIGHT									
	D_o (in)	d_i (in)	H (in)	H_o (in)	H_i (in)	D_r (in)	D_i (in)	d_o (in)	d_r (in)	G APPROX. (lbs)
16367001	57.100	42.500	5.000	4.500	4.500	53.750	48.850	49.090	42.630	1,250
16368001	71.338	57.000	5.850	4.790	4.630	69.040	63.760	64.030	57.080	1,600
16369001	97.795	76.850	7.126	5.472	6.772	—	86.614	87.047	—	4,400
16370001	115.800	90.500	10.750	8.500	10.250	—	104.240	104.040	—	10,000
16371001	152.756	129.921	10.039	8.071	9.646	—	141.535	141.339	—	11,130
16372001	170.079	144.882	9.941	7.638	9.449	—	156.729	157.155	—	13,830
16373001	210.968	187.795	8.819	8.425	8.425	207.480	198.622	199.055	—	14,330
16388001	233.000	203.000	11.750	9.250	11.250	228.000	216.880	217.380	—	25,500

TR Series

HOLE DATA						GEAR DATA						GEAR TOOTH RATING	BEARING MOMENT RATING
OUTER RING			INNER RING			$\alpha = 20°$							
L_o (in)	n_o	B_o (in)	L_i (in)	n_i	B_i (in)	TOOTH FORM	D_2 (in)	P_d or (m)	z_2	x_2	b_2 (in)	F_z (lbs)	C_{rm} (ft-lbs)
52.000	40	1.094	44.375	40	1.094	FD	56.000	1.5	84	-.18	4.000	46,750	829,300
66.889	60	1.024	59.252	60	1.024	FD	69.921	(12)	148	+.50	3.430	27,510	1,329,900
91.535	40	1.535	79.921	40	1.535	FD	96.378	(18)	136	0	5.472	70,630	4,129,500
109.750	96	1 1/2-6	94.500	96	1 1/2-6	SD	115.000	2	230	0	8.500	89,510	12,091,000
145.669	90	1.299	133.465	90	1.299	FD	150.394	(20)	191	+.50	8.071	117,500	11,652,000
162.992	120	1.535	148.425	120	1.535	FD	168.504	(20)	214	0	7.638	111,600	24,086,000
202.756	120	1.535	190.945	120	1.535	FD	208.346	(18)	294	+.85	5.906	78,770	32,339,000
224.000	150	1.563	207.000	150	1.563	FD	230.000	1	230	+.50	7.000	130,300	43,823,000

TR Series Load Charts – No Gear

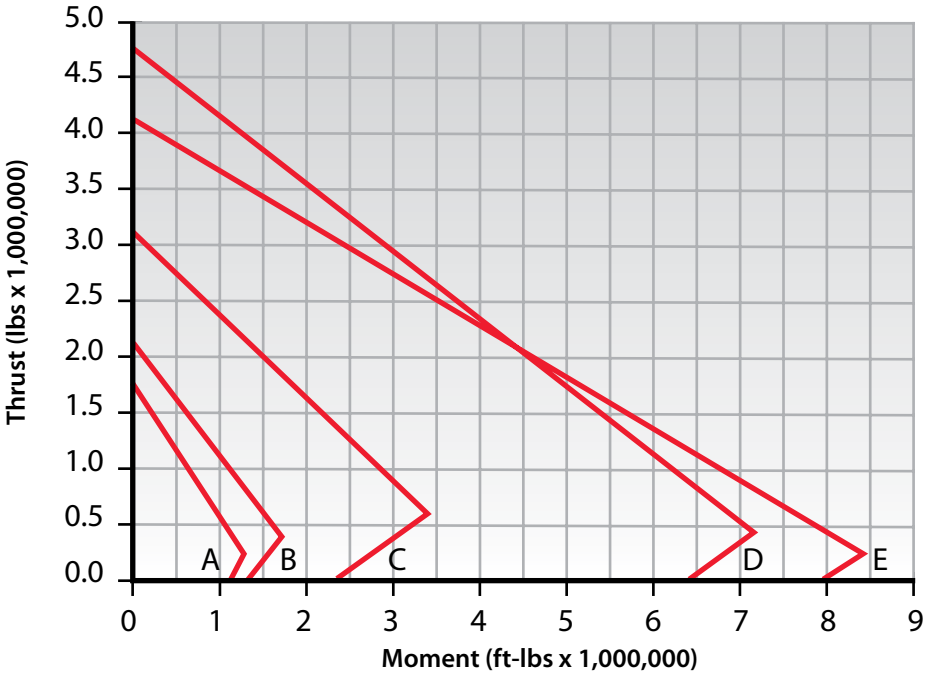

(A) 16349001
(B) 16350001
(C) 16351001
(D) 16352001
(E) 16353001

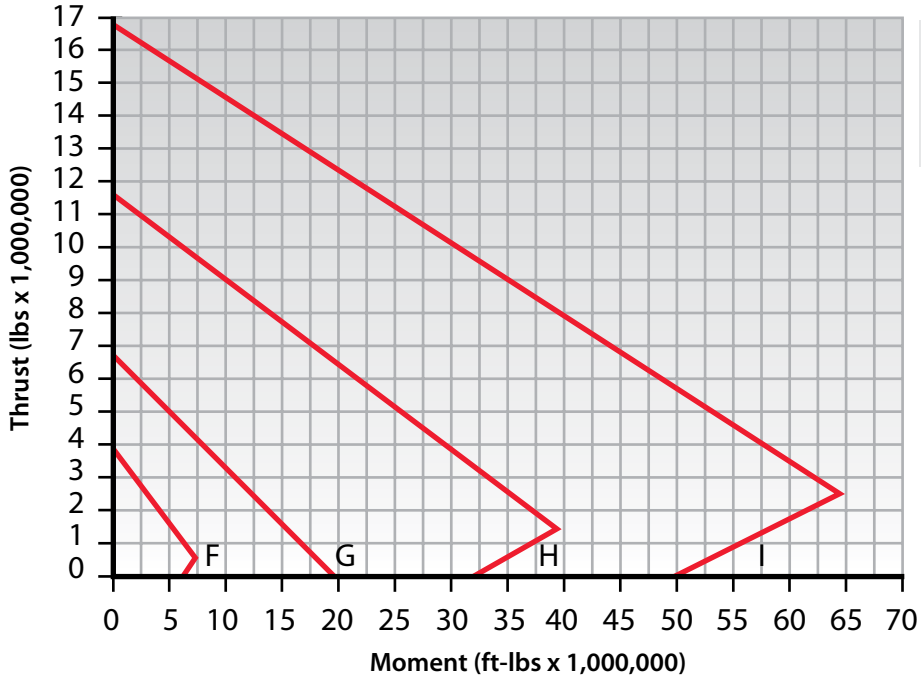

(F) 16354001
(G) 16356001
(H) 16387001
(I) 16366001

Rating Charts are only applicable for operating conditions defined as NORMAL OPERATION in Section 2 and when installed and maintained as defined in Section 3 of this catalog. Bearing diameter increase does not necessarily ensure bearing rating increase due to variations in rolling elements, ring section, and fastener complements. For information concerning the basis for development of Rating Charts refer to the LOAD RATING paragraph in Section 2.

TR Series Load Charts – Internal Gear

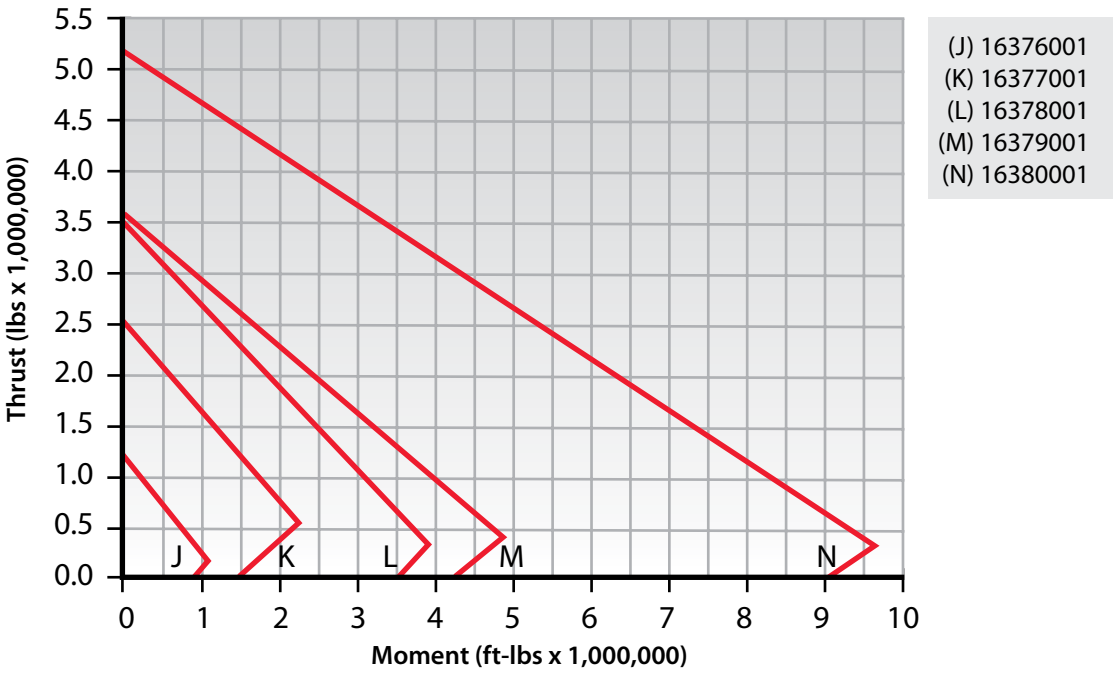

(J) 16376001
(K) 16377001
(L) 16378001
(M) 16379001
(N) 16380001

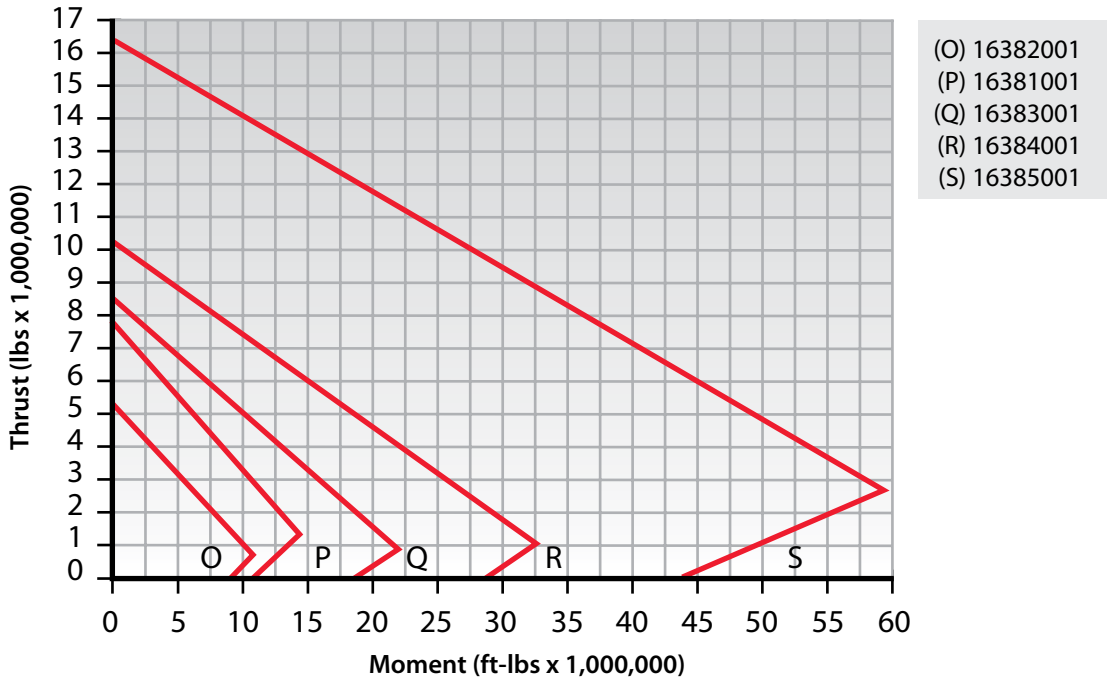

(O) 16382001
(P) 16381001
(Q) 16383001
(R) 16384001
(S) 16385001

Rating Charts are only applicable for operating conditions defined as NORMAL OPERATION in Section 2 and when installed and maintained as defined in Section 3 of this catalog. Bearing diameter increase does not necessarily ensure bearing rating increase due to variations in rolling elements, ring section, and fastener complements. For information concerning the basis for development of Rating Charts refer to the LOAD RATING paragraph in Section 2.

TR Series Load Charts – External Gear

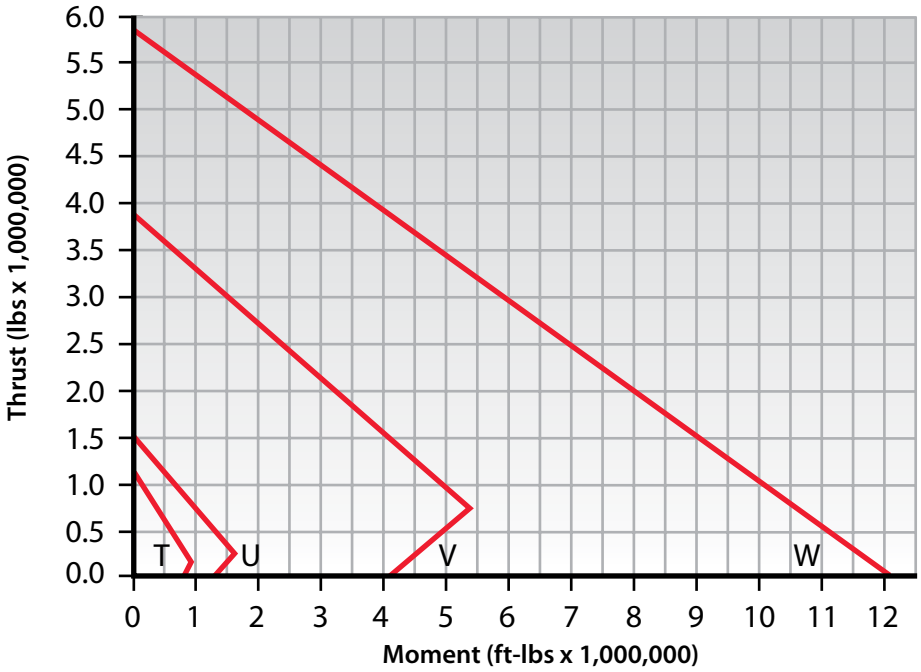

(T) 16367001
(U) 16368001
(V) 16369001
(W) 16370001

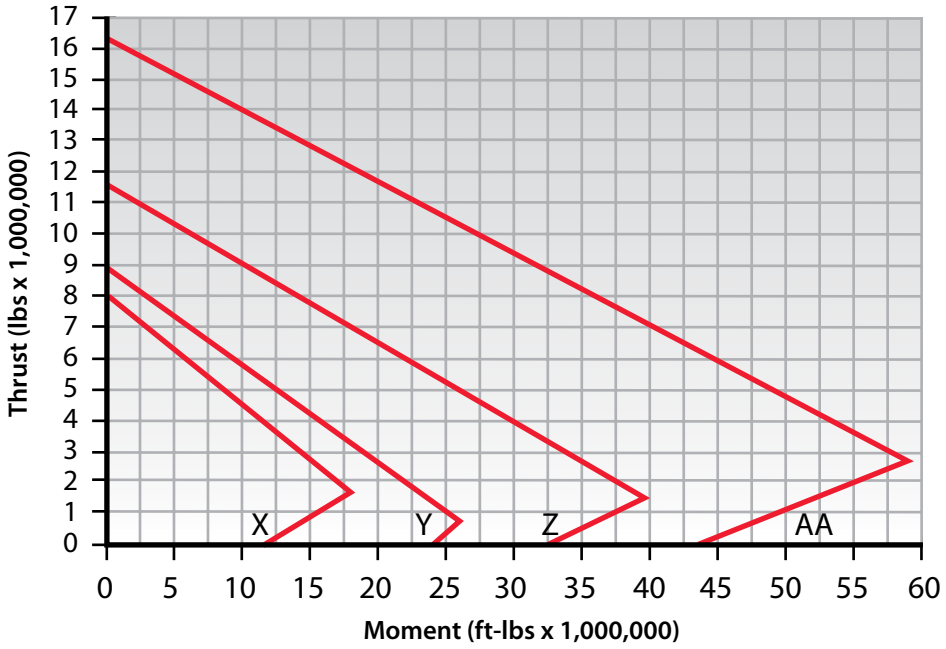

(X) 16371001
(Y) 16372001
(Z) 16373001
(AA) 16388001

Rating Charts are only applicable for operating conditions defined as NORMAL OPERATION in Section 2 and when installed and maintained as defined in Section 3 of this catalog. Bearing diameter increase does not necessarily ensure bearing rating increase due to variations in rolling elements, ring section, and fastener complements. For information concerning the basis for development of Rating Charts refer to the LOAD RATING paragraph in Section 2.









Section 5 Contents
Specialty Products & Services

	Page Number
WireX® Wire-Race Bearings	115
Custom Bearings	116-117
Remanufacturing Program	118-121
Endurakote® Plating	122-123

Custom WireX® Wire-Race Bearings



Kaydon WireX® bearings were originally designed for military turret applications, where space and weight are at a premium and corrosion resistance is essential. They consist of wire raceways inserted in lightweight support rings, allowing for a high load capacity and large diameter in a bearing that can be 60% lighter than one made entirely of steel.

Design Features

The bearing's support rings are typically aluminum, with contoured grooves for supporting, positioning, and alignment of steel wire raceways. The rolling elements are typically stainless steel, with up to three rows of rollers to fit individual requirements. This internal configuration allows WireX® bearings to be more tolerant of non-rigid and out-of-flat mounting structures. Irregularities can be accommodated by the relative movement of the wire inserts in their supporting grooves.

Gear teeth or other drive mechanisms can be provided on the inner or outer support ring, and a variety of hole patterns can be added for bearing retention.

WireX® bearings can often be rebuilt – a substantial savings when compared to complete bearing replacement.

Availability

WireX® bearings are custom manufactured to fit your design and specification.

Applications

WireX® bearings have been used successfully in applications requiring a lightweight, corrosion-resistant bearing including:

- Turrets
- Radar
- Sonar

Custom Bearing Capabilities

In addition to the more standard bearings shown on earlier pages, Kaydon has extensive experience in the design and manufacture of customized or special bearings and assemblies. This experience allows us to match the product to the requirements.

The ball and roller bearings shown below are only a sampling of our custom capabilities, provided to further inspire your creativity to find the optimum solution.

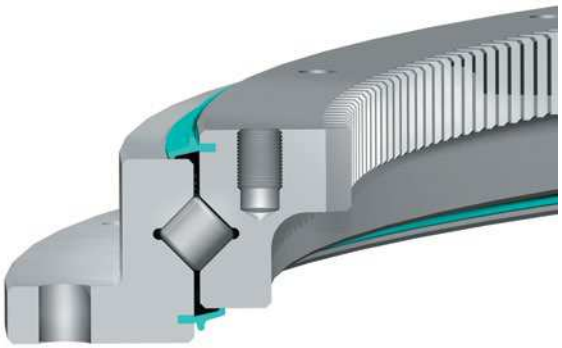

Figure 5-1

A thin-sectioned cross roller bearing combines the features of higher stiffness, increased dynamic capacity, and lower turning torque with weight and space savings. Rollers may be oriented as needed to maximum load carrying ability and fatigue life. Designs with similar configurations and features range from 15 inches to over 90 inches.

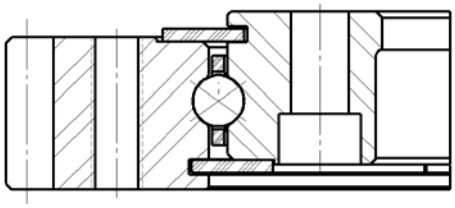

Figure 5-2

A thin-sectioned large diameter bearing with external gear made from special stainless steel rings, plastic rolling elements, and separator for low permeability and to limit out-gassing. Use of plastic rolling elements also permits operation without lubrication. Similar designs and components have been produced for sizes up to 70 inches.

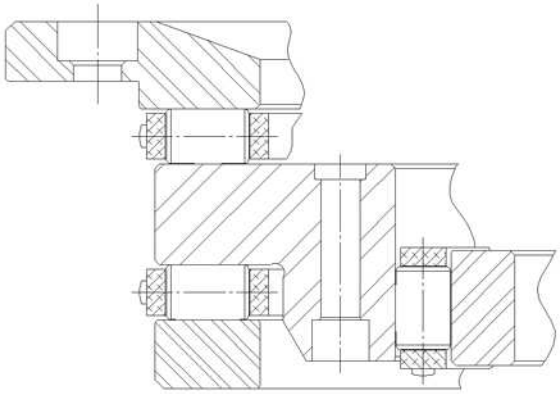

Figure 5-3

A complex three-row roller bearing with minimal raceway material provides the customer with light weight and space saving opportunities. The thin sections and unusual configurations permit compact overall design. Three separate rows of rollers permit use in applications with simultaneous as well as reversing radial, axial, and moment loads. Roller complement and raceways may be oriented and designed to optimize capacity and fatigue life as well as stiffness. Designs with similar features have exceeded 90".



Figure 5-4

A three ring, two-rolling complement bearing with two integral gears, one on the inner and one on the outer ring is shown. This configuration when combined with precision components permits accurate, smooth, independent, and synchronized rotation of the rings and any attached components. Use of a separator increases the bearing's operating speed capability and, combined with low friction seals, permits minimal rotational resistance. The total package significantly reduces the number of components needed to perform the same functions as this design currently does.

Custom Bearing Capabilities (continued)

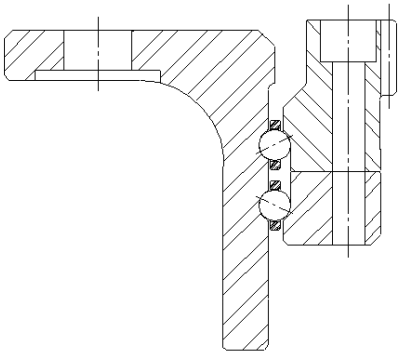

Figure 5-5

This flange mounted, thin-sectioned large diameter bearing is light weight, requires minimal space, and fits around existing components. The flanges are scalloped between holes to provide greater weight reduction. The use of double row angular contact rolling complement with separators provides minimal rotational resistance and can be used for high accelerating conditions as well as very high continuous operating speeds. The high precision gear on the inner ring provides for accurate positioning.



Figure 5-6

A four-point ball bearing with integrated v-belt groove in one ring permits a simple mechanical drive option at low cost with no lubrication and minimal maintenance.

Belt drive designs, flat or tooth, are potential alternative solutions depending on application conditions. Use of a separator increases the bearing's operating speed capability and, combined with low friction seals, permits minimal rotational resistance.

A dedicated remanufacturing program



Kaydon infinite® expertise in bearing design and manufacturing has established Kaydon as the world's leading remanufacturer of slewing ring and thin section bearings.

Our approach to bearing remanufacturing mirrors our manufacturing effort, with an experienced remanufacturing staff supported by expert engineers and dedicated, state-of-the-art equipment. Our Bearing Remanufacturing Program is designed to return a bearing to service in the shortest possible time, while ensuring the highest quality workmanship on a very cost-effective basis.

A bearing repaired by Kaydon will perform like a new bearing at a significantly lower cost, yet carry an equal warranty. One example is a big slewing ring bearing remanufactured at the request of a major U.S. mine operator — it easily passed its 35,000-hour inspection (30,000 hours is typical) and is still going strong.

We can remanufacture bearings as small as 10" (25 cm) and as large as 240" (6.1 m). Kaydon infinite® remanufacturing solutions extend to all ball bearings and roller bearings, regardless of the original manufacturer. These include:

- Thrust ball bearings & thrust roller bearings
- Radial ball bearings & radial roller bearings
- Cross roller bearings
- Double row, angular contact bearings
- Three row roller bearings
- Ball bearings
- Multi-row/double-row ball bearings
- Cylindrical roller bearings
- Thin section ball bearings and roller bearings

The Kaydon remanufacturing program is not only dedicated, but comprehensive. It features:

- Free inspection on slewing ring bearings up to 8' in diameter
- Inspection in approximately one week
- Non-destructive testing performed on all bearings
- Engineering analysis
- Analysis reports provided for all inspections
- Four-week turnaround time for bearings 8' and under, and just a few more weeks for bearings 8' to 20' in diameter
- Substantial savings versus the cost of a new replacement bearing
- Stringent ISO 9001:2008 quality program
- Emergency remanufacturing services
- One year warranty for all remanufactured bearings

Kaydon also manufactures new replacement slewing ring bearings that meet original OEM specifications at substantial savings vs. OEM bearing prices. Our proven process features reverse engineering and comprehensive design analysis to maximize dynamic life and static capacity. And our strategically located facilities have the flexibility to fill high-volume and low-volume orders.





Remanufacturing Program

Kaydon's bearing repair program is designed to provide the best service options available – no matter the brand or size of bearing. Bearings are assessed for remanufacture from 10 inches to 240 inches in outside diameter (OD).

In this program optimized solutions are provided through our experienced sales team, international presence, and process capability. The process begins with the service engineering team partnering with the customer's maintenance or service groups to analyze the bearing.

Bearing Failure Warning Signs

Perhaps the most difficult task is determining if and when a bearing needs to be serviced. This determination requires much more than a quick visual inspection. Below are a few signs to look for when inspecting bearings that may need to be repaired:

- The bearing is nearing its suggested life expectancy.
- The bearing has exceeded an operating temperature of 200° F (93° C).
- The bearing has been exposed to excessive vibration.
- The bearing experienced a sudden drop or gain in lubrication.
- The bearing has a missing or torn seal.
- The bearing exhibits excessive rotational resistance.
- The structure has excessive movement or rocking during operation.
- The mating structure and hardware is damaged, e.g. cracked, broken, distorted, or even missing.
- The bearing exhibits limited rotation, uncharacteristic vibrations, or noise.
- Visible damage to gear or bearing

Paying attention to these details during regular maintenance checks can help you determine whether a bearing needs maintenance before it causes unnecessary downtime and expense. Careful observation is the first step in creating a program that monitors your bearings and surrounding operations.

WARNING: Proper maintenance and handling practices are critical. Failure to follow installation, maintenance, and operating instructions can result in equipment failure, creating a risk of bodily injury or death.

To provide the correct repair solution to the damaged bearing, the cause and extent of the damage must be understood. Environmental issues, such as ingress of contamination and water into the bearing, are the common causes of premature bearing failure. Following are typical causes of damage found on bearings and precautions that can be taken to prolong life.

- **Improper Handling:**

  Cage deformation and nicks or gouges can result from improper installation, handling or removal.

  Precautions: Use proper handling practices along with the correct handling, mounting and disassembly tools.

- **Inadequate Lubrication:**

  Scoring of components or severe bearing deformation can result from inadequate or incorrect lubrication.

  Precautions: Inspect and replace the lubricant at the manufacturer's recommended interval or as needed, whichever occurs first. If necessary, change or improve lubricant.

- **Corrosion and Etching:**

  Exposure to moisture can lead to etching, pitting, then rusting of bearing components. Spalling may result from bearings that operate after such damage.

  Precautions: Check seals regularly, ensure proper sealing and store bearings properly.

- **Electric Current:**

  Passage of electric current while a bearing is rotating may cause fluting or grooving. Improper electric grounding while a bearing is stationary can create small burns.

  Precautions: Shunt the current around the bearing with the proper earth connection before welding.

Remanufacturing Program

- **Foreign Material:**

  Abrasions, bruising and grooving can result from abrasive particle contamination and debris.

  Precautions: Remove the debris, change the lubricant, and check/replace the seals.

- **Misalignment:**

  Geometric stress concentration and spalling can result from misalignment, deflections or heavy loading.

  Precautions: Machine the bearing seats and shoulders accurately. Check accuracy of shaft and housing seats, ensure proper shaft/housing alignment and confirm or reduce operating forces.

- **Overloading:**

  Improper use for the intended application can lead to overload conditions accelerating wear.

  Precautions: Utilize the equipment for the intended application within the load limits defined.

Kaydon Service Options

The initial analysis covers the cleaning, verification of internal clearances, disassembly, and inspection of the bearing assembly. The engineering team then assesses the damage and provides a quotation based on the most appropriate remanufacturing type to restore the bearing to full operation. The three repair classifications are:

Class A Repair

To ensure correct geometry and alignment, bearing assemblies require machining of rolling element pathways and the surfaces that interface with the mounting structure for correct installation. Oversize rolling elements are used to restore the desired internal clearance or preload and new spacers and seals are fitted.

Class B Repair

Bearing assemblies require polishing or other surface alterations to relieve stressed or corroded areas on the raceway or mounting surfaces. The bearing is re-assembled with new rolling elements, spacers, and seals as required.

Class R Repair

Bearing assemblies require a completely new bearing ring to match an existing repairable ring. The existing raceway is machined to give correct geometry and the new ring and raceway are manufactured to match the repaired component. New rolling elements, spacers, and seals complete the refurbishment.

Taking the Next Step

1. Contact Kaydon's remanufacturing service for a customized solution:
   - call 800-286-6274 ext. 226
   - or visit www.kaydonbearings.com/remanufacturing.htm
2. The Kaydon representative will work to assess the bearing repair needs.
3. Kaydon will physically assess the bearing's condition and provide a quotation.
4. When the repair is authorized, the plant will perform all necessary repairs and return the bearing within the promised lead time. If it is decided not to proceed with the repair, the damaged bearing will be disposed of or returned disassembled.

Endurakote® Plating for Corrosion-Resistant Bearings

Introduction

Endurakote® plating protects bearings from corrosion and provides substantial life improvements in hostile environments. Endurakote® plating is applied over conventional bearing materials and offers the benefit of corrosion resistance normally found only in stainless steel bearings. The coating is applied to each entire bearing race ring, including the paths, thus leaving no area exposed. Other commercial chrome or cadmium coatings normally accepted and used cannot be applied to the path due to the rolling contact stresses. Endurakote® plating is hard chromium, electrodeposited by a proprietary process which achieves a true molecular bond, and will not flake or peel even under the high contact stresses experienced in the bearing paths.

Laboratory and field testing results have proven the benefits of this process. Severe salt spray testing has shown that bearings with Endurakote® plating withstand corrosion as well as or better than AISI 440C stainless steel. The hard, dense exterior surface formed by the coating is extremely wear resistant and is excellent in the retention of the lubricant film. Conventional life testing of bearings with Endurakote® plating has shown that no life derating is necessary. In fact, the extremely hard surface of Endurakote® plating protects the bearing from surface generated damage which can promote premature failure. Since the coating is capable of withstanding extremely high temperatures, the bearings are limited by the bearing materials or lubricant used.

The coating used for Endurakote® plating can be applied to any type of bearing and to most bearing materials. Its primary advantage is to utilize stock materials with their economies, and convert them to wear- and corrosion-resistant bearings. This is particularly beneficial for larger diameter bearings or where quick delivery is critical. Thus, cost savings can be achieved over more exotic or specialized materials. Also, stock bearings can have Endurakote® plating applied for quick delivery.

The net result is that we can offer bearings with the capacity of conventional bearing steels and the corrosion resistance of AISI 440C stainless steel from standard stock components.

Application

Endurakote® plating provides corrosion resistance and is effective in increasing wear resistance in sliding surface contacts. The micro-surface composition of Endurakote® plating aids in lubricant dispersion, enhancing base metals to the degree of reducing or eliminating galling, seizing, and high friction, over a wide range of installations and environments.

Advantages

Endurakote® plating effects a buildup of less than .0002 under normal circumstances. Thus, it can often be applied to stock bearing components which have been specially selected. Endurakote® plating is compatible with most ferrous and nonferrous metal, allowing maximum flexibility in selection of base material. Endurakote® plating is normally a final process, and its quality is constant with any given base metal, insuring design reproducibility.

Properties and Characteristics

A. Hardness

Endurakote® plating, as deposited, has an equivalent hardness in excess of 70 Rockwell "C." When measured by conventional micro-hardness methods, the host material will modify this measurement to some degree.

B. Coefficient of Friction

(**Note:** Measurements made at 72°F, using other materials for comparison.)

Material	Against Material	Static — Sliding
Steel	Steel	0.30 — 0.20
Steel	Brass, Bronze	0.25 — 0.20
Steel	Endurakote® plating	0.17 — 0.16
Brass, Bronze	Endurakote® plating	0.15 — 0.13
Endurakote® plating	Endurakote® plating	0.14 — 0.12

Endurakote® Plating (continued)

C. Adhesion

Endurakote® plating will not flake, crack, chip, peel or otherwise separate from the base material under standard bend tests or under conditions where severe heat is induced. The adherence is adequate to withstand the extremely high compressive stresses in the contact areas of ball and roller bearings.

D. Effect On Base

The purity of the chromium surface will not be less than 99% as deposited. A comprehensive testing program at Kaydon established that bearings with Endurakote® plating exhibited load-carrying capacities and life expectancy equal to or better than uncoated steel bearings.

E. Corrosion Resistance

Endurakote® plating resists attack by most organic and inorganic compounds with a pH within the range of 4 and 11, except sulfuric and hydrochloric acids. Porosity of the base metal, compound concentration and exposure time to the compound become corrosion factors, but Endurakote® plating greatly enhances the base material. In severe salt spray tests as well as tap water immersion tests, bearing steel with Endurakote® plating proved equal to fully hardened AISI 440C stainless steel in resistance to rusting. In many instances, Endurakote® plating is better for corrosion protection than cadmium plate, zinc plate, phosphates, chromates, black oxide or normal chrome plate. We invite inquiries about and will be pleased to arrange tests to qualify Endurakote® plating for specific environments.

F. Heat Resistance

Bearings with Endurakote® plating are designed to maintain their operating characteristics over a temperature range from -65°F to 250°F.

G. Surface Quality

Endurakote® plating conforms to the texture of the existing surface. Ra finish will be improved slightly down to about 8 Ra; below 4 Ra there is little change. Endurakote® plating has a matte or micro-orange peel surface with very good lubricant retention qualities.

H. Food Industries

Endurakote® plating can be used on food processing equipment.

I. Load Capacity

Endurakote® plating does not affect the static or dynamic load capacity of the bearing.

Bearing Size Capabilities

Endurakote® plating can be applied to slewing ring bearings up to 45 inches.

Restrictions

Kaydon does not recommend the use of Endurakote® plating in any low torque or torque-sensitive applications.

Section 6 Contents
Appendix & Sales Information

	Page Number
Specification Data Sheet	125-126
Kaydon Website	127
Kaydon Literature	128
Warranty & Legal Information	129-131

Specification Data Sheet *Choose one of 4 easy ways to complete and return*

MAIL: Kaydon Bearings, PO Box 688, Muskegon, MI 49443

ONLINE: www.kaydonbearings.com, **FAX:** 231-759-4102, **EMAIL:** bearings@kaydon.com

1. Contact Information

Name		Company	
Title		Address	
Email		City	
Phone		State	
Fax		Postal Code	Country

2. Quotation Data

Quotation Quantity	Pcs / delivery lot	Annual Usage	Pcs / year
Required Delivery	Weeks	Target Price	Per Unit
Proposal Required	Date		

3. Application Description (please attach additional drawing or sketch)

Application (Reference Table 2-4 Service Factors pg. 17) _____

Which of the following applies? ☐ New application

☐ Interchange for existing bearing. Include reason(s) for seeking interchange below.

Other considerations

Position of rotation axis

☐ Vertical

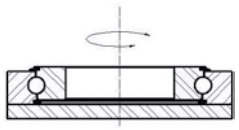

☐ Horizontal

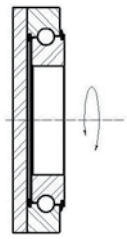

☐ Inclined/Variable

Nominal (relative to vertical)

α _____ degrees

Range

$\pm\beta$ _____ degrees

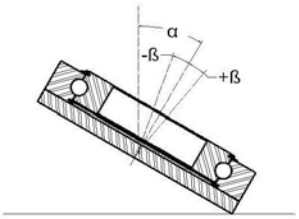

Axial load direction

☐ Compression

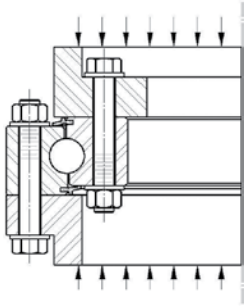

☐ Tension (Suspended)

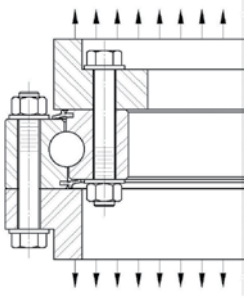

Ambient temperature	Minimum _____ °F	Normal _____ °F	Maximum _____ °F
Seals Required	☐ No ☐ Yes, Against:		
Specific Lubrication Required	☐ No ☐ Yes, Type:		
Special environmental considerations?	☐ No ☐ Yes, Describe:		

Specification Data Sheet continued

4. Bearing Information

	Outline Dimensions		
	Minimum	Preferred	Maximum
ID	_____ in.	_____ in.	_____ in.
OD	_____ in.	_____ in.	_____ in.
Width	_____ in.	_____ in.	_____ in.

	Mounting Holes	
	Inner Race	Outer Race (☐ Same as inner)
Size		
Quantity		
Style	☐ Through ☐ Tapped through ☐ Tapped blind	☐ Through ☐ Tapped through ☐ Tapped blind
	☐ C'drilled ☐ C'bored	☐ C'drilled ☐ C'bored

Gear Data		
	☐ None	☐ Internal ☐ External
Tooth Form	☐ Full Depth	☐ Stub
Dia. Pitch (Mod)	_____	
Pitch Diameter	_____	in.
Pressure angle	_____	degrees
Number of teeth	_____	
Addendum mod.	_____	in.
Face width	_____	in.

Mating Pinion (s)		
Number used	_____	
Number of teeth	_____	
Addendum Mod.	_____	in.
OD	_____	in.

Center Distance		
☐ Adjustable	☐ Fixed, distance	_____ in.

5. Load Parameters

Load Case	Bearing Loads			Speed (RPM)		Gear Load Torque (ft-lbs)	Percent of Time
	Axial (lbs)	Radial (lbs)	Moment (ft-lbs)	Mean	Max		
Static				—	—	—	
Normal Operating 1							
Normal Operating 2							
Normal Operating 3							
Maximum Operating							
Test/Overload							

Safety factor included in loads above?	☐ No ☐ Yes, _____	Additional application service factor required?	☐ No ☐ Yes, _____
Rotation	☐ Intermittent ☐ Continuous without interruption ☐ Oscillating, degrees	☐ One direction only ☐ Alternating directions	
Life required (L_{10})	☐ Hours (based on speeds in above table) ☐ Revolutions / oscillations		
Shocks or vibrations?	☐ No ☐ Yes, describe: _____		
Special conditions: *materials, torque, accuracy, seals, protective coatings, etc.* _____			

6. Comments

Visit our website: www.kaydon**bearings**.com for latest releases, newest features, slewing ring bearing selector, and downloads of catalogs, white papers, videos, software, and CAD drawings.

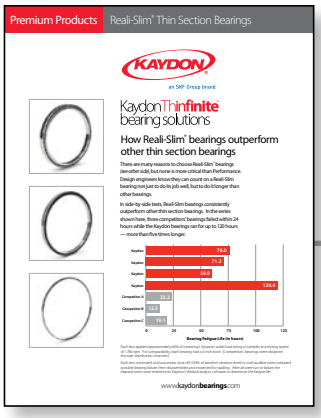

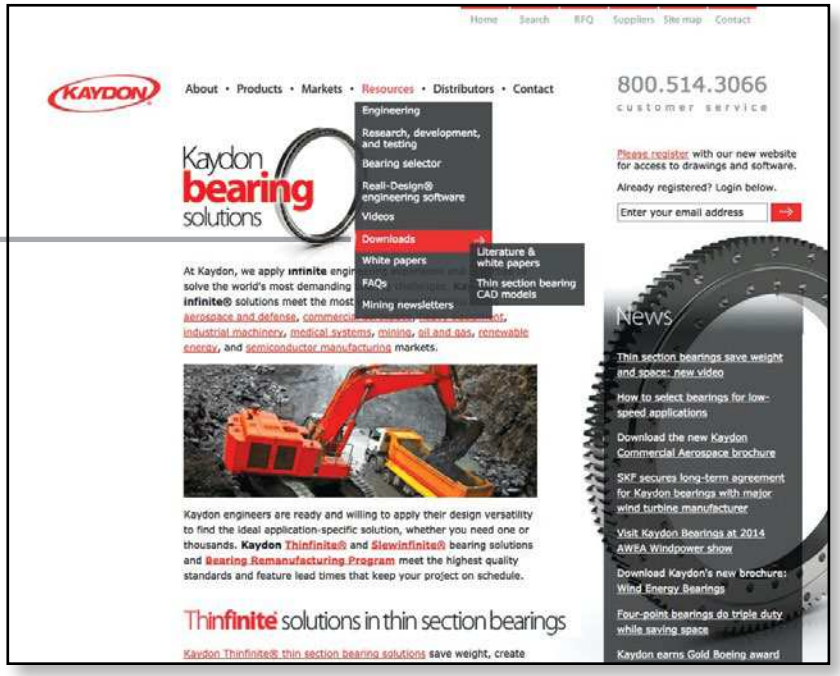

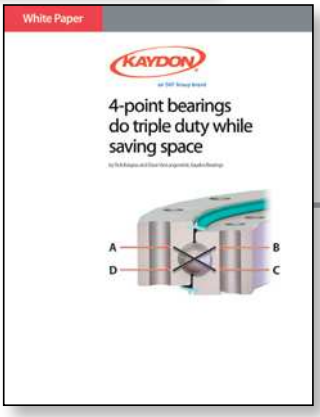



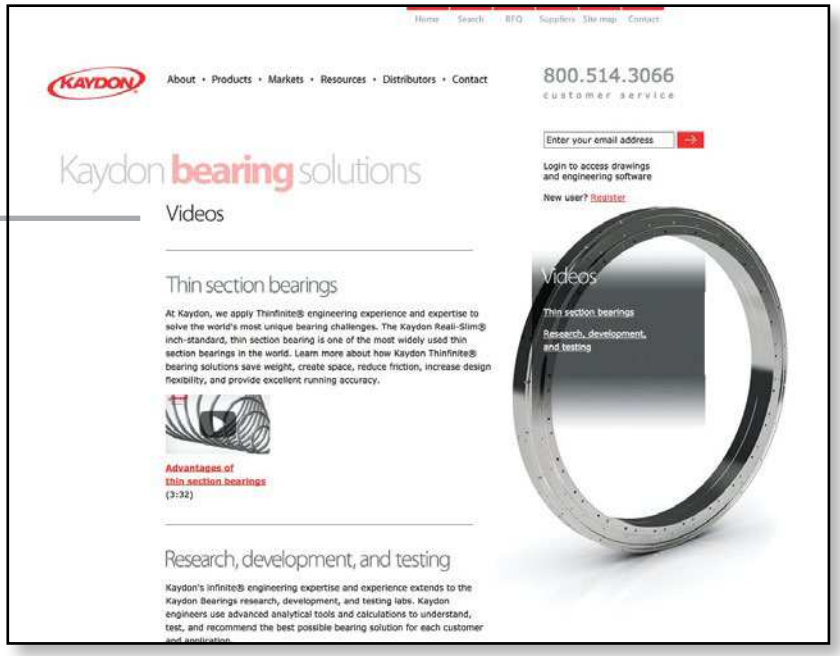



Application Information to Help in Your Designs

Also available for download from our website www.kaydon**bearings**.com.



1. Bearings for Aerospace-Defense applications

Highlights Kaydon's experience in a wide range of aerospace-defense applications, plus custom design capabilities and industry certifications (e.g., AS9100C).
Aerospace/Defense



2. Bearing solutions for the Mining Industry

4-page brochure for mining equipment users features Kaydon's remanufactured and new replacement bearings. Both perform like OEM bearings at lower cost, with faster delivery.
Mining Industry



3. Remanufactured Bearings program

Explains Kaydon's dedicated program for remanufacturing worn ball and roller bearings to like-new quality at substantial savings, with 1-year warranty.
Bearing Remanufacturing Program



4. Reali-Slim® thin-section bearings catalog

Complete engineering and selection information on the entire product line, including Reali-Slim MM® metric series, Reali-Slim TT® turntable series, and Ultra-Slim® series. 136 pages.
Catalog 300



5. Stainless steel Reali-Slim® bearings brochure

Open, sealed and custom bearings for harsh environments, including specifications, mountings and typical applications. 4 pages.
Stainless Steel Bearings



6. Kaydon Bearings applications guide

See more than 160 applications for Reali-Slim and slewing ring bearings, in markets as diverse as aerospace, semiconductors and heavy equipment. 8 pages.
Applications Guide



7. Reali-Design® and Reali-Design MM® software

Speeds Reali-Slim® bearing selection process. Includes data sheets, life calculations, and CAD-ready DXF library for both inch and metric series. Software is downloadable from www.kaydon**bearings**.com.

For Split Roller Bearings, visit our sister division's website: www.cooperbearings.com.

Warranty Information and Legal Notices

WARNING - Damage to equipment and danger to human life can result from failure to heed the recommendations in the text identified by the warning symbol.

Disclaimer

The design and application information contained in this catalog is for illustration only. Responsibility for the application of the products contained in this catalog rests solely with the equipment designer or user. In spite of our best efforts, the material contained in this catalog may contain inaccuracies and typographical errors.

Hazard Notice

The use of any part, such as those described in this catalog, may be hazardous and have the potential to cause serious injury, including death, to people or property. The purchaser is responsible for evaluating the hazards associated with any part used in their application.

Kaydon Standard Terms and Conditions of Sale

1) **Scope.** Prices quoted are for acceptance within thirty (30) days from date of quotation unless otherwise stated. The terms and conditions of sale set forth below apply to all quotations made and purchase orders accepted by Seller.

2) **Acceptance of Orders.** All orders are subject to acceptance by authorized officials at Seller's division or subsidiary offices.

3) **Scheduling.** Shipping dates are approximate and are based upon prompt receipt of all necessary information. Buyer shall furnish to Seller written shipping instructions in sufficient time to permit Seller to make shipment at Seller's option within any time or times herein specified for shipment. In the event of a delay in delivery due to any reason described In Section 15 below the delivery date shall be deferred for a period equal to the time lost by reason of delay. In the event such delay shall continue for more than two weeks then, at Seller's option, the order will be deemed cancelled without liability to Seller.

4) **Delivery and Transportation.** Seller's delivery dates are approximate and Seller shall use commercially reasonable efforts to deliver in accordance with the delivery and performance schedules. Seller shall not be liable for delays in delivery or other defaults in performance of this order arising out of causes beyond Seller's control. Unless otherwise agreed to in writing by Seller, delivery of the products hereunder shall be made EXW Seller's place of manufacture (Ex-Works INCOTERMS® 2010). Title to products passes to Buyer and products are at risks to Buyer from and after delivery EXW Seller's place of manufacture. Transportation expenses will be paid by Buyer and risk of loss, shortage, delay or damage to products in transit shall fall upon Buyer, whose responsibility it shall be to file claims with the carrier.

5) **Terms of Payment.** Invoices are due and payable (30) thirty days from the date of invoice unless other terms are shown on the face hereof. A 1 1/2% carrying charge will be applied to all past due amounts. If shipments are delayed by Buyer, payments shall become due on the date when Seller is prepared to make shipment. If the work covered by the purchase order is delayed by Buyer, payments shall be made based on the purchase price and the percentage of completion. Seller reserves the right to ship to its order and make collection by sight draft with bill of lading attached.

6) **Taxes.** Prices do not include foreign or domestic sales, use, excise or similar taxes. Consequently, in addition to the prices specified herein, the amount of any present or future sales, use, excise or other general or specific tax, or export or import duties, tariff or penalties or other governmental charges fixed or imposed by any lawful authority(ies) upon or applicable to the production, sale, shipment, delivery or use of the products sold hereunder shall be added to the price and be paid by Buyer or, in lieu thereof, Buyer shall provide Seller with a tax exemption certificate acceptable to the taxing authorities. If such tax is paid by Seller, Buyer shall reimburse Seller upon presentation of invoice.

7) **Warranty.** Seller warrants the products manufactured by it to be free from defects in title, material and workmanship. The extent of Seller's obligation hereunder is to either repair or replace its nonconforming products, EXW Seller's plant, if returned within twelve (12) months after date of delivery. No allowance will be granted for repairs or alterations made by Buyer without Seller's written approval. The warranty shall not be construed to cover the cost of any work done by Buyer on material furnished by Seller or the cost of removal or installation of product. Products and parts not manufactured by Seller are warranted only to the extent and in the manner that the same are warranted to Seller by Seller's vendors and then only to the extent Seller is able to enforce such warranty. THE FOREGOING STATES THE SOLE AND EXCLUSIVE WARRANTIES PROVIDED BY SELLER TO BUYER AND THERE ARE NO OTHER WARRANTIES EITHER EXPRESSED OR IMPLIED IN FACT OR BY LAW. THE WARRANTIES STATED HEREIN ARE IN LIEU OF ALL OTHER WARRANTIES, WRITTEN OR VERBAL, STATUTORY, EXPRESSED OR IMPLIED, INCLUDING WARRANTIES OF MERCHANTABILITY AND FITNESS FOR A PARTICULAR PURPOSE, WHICH ARE HEREBY DISCLAIMED. SELLER'S WARRANTY DOES NOT APPLY TO ANY GOODS WHICH HAVE BEEN SUBJECTED TO MISUSE, MISHANDLING, MISAPPLICATION, NEGLECT, (INCLUDING BUT NOT LIMITED TO USE OF UNAUTHORIZED PARTS OR ATTACHMENTS), OR ADJUSTMENT OR REPAIR PERFORMED BY ANYONE OTHER THAN SELLER OR ONE OF SELLER'S AUTHORIZED AGENTS.

8) **Limitation of Liability.** Seller shall not be responsible, obligated, or liable for any injury or damage resulting from an application or use of its products, either singly or in combination with other products. SELLER'S SOLE LIABILITY FOR BREACH OF WARRANTY OR ANY OTHER CLAIM SHALL BE LIMITED TO REPAIR OR REPLACEMENT OF THE PRODUCTS OR RETURN OF THE PURCHASE PRICE, AT SELLER'S SOLE OPTION. SELLER SHALL NOT BE LIABLE FOR DAMAGES, INCLUDING BUT NOT LIMITED TO CONSEQUENTIAL, INCIDENTAL, PUNITIVE, LIQUIDATED OR SPECIAL DAMAGES ARISING OUT OF OR IN CONNECTION WITH THE USE OR PERFORMANCE OF THE PRODUCTS OR ARISING OUT OF ACCEPTANCE OF THIS ORDER. BUYER SHALL INDEMNIFY SELLER AGAINST ALL LIABILITY, COST, OR EXPENSE THAT MAY BE SUSTAINED BY SELLER BECAUSE OF ANY SUCH LOSS, DAMAGE, OR INJURY.

9) **Acceptance of Products.** Products will be deemed accepted without any claim by Buyer unless written notice of non- acceptance is received by Seller within thirty (30) days of delivery EXW Seller's place of manufacture, or ten (10) days of delivery if the parties agree to shipping terms other than EXW. Such written notice shall not be considered received by Seller unless it is accompanied by all freight bills for such shipment, with agent's notations as to damages, shortages and conditions of equipment, containers and seals. Non-accepted products are subject to return policy stated below.

10) **Return of Products.** No product may be returned to Seller without Seller's prior written permission the form of a return material authorization.

11) **Damages to Returned Products.** If Buyer elects to return product(s) to Seller for refurbishment, Buyer agrees to accept all risk of damage or destruction of such returned product(s), and Seller shall not be liable for any failure or inability on the part of Seller to complete refurbishment upon any such returned products.

12) **Limitations of Actions.** All claims, demands or actions must be brought within one (1) year of date of tender of delivery, or eighteen (18) months of Buyer's order, if no tender of delivery is made, notwithstanding any statutory period of limitation to the contrary.

13) **Intellectual Property.** Buyer shall defend, indemnify and hold Seller harmless against any and all claims, demands judgment, expense or loss resulting from infringement of third party patents, copyrights or trademarks arising from Seller's compliance with Buyer's design, specifications or instructions.

The sale of products or parts hereof by Seller does "not convey any license, rights, title or interest by implication, estoppel, or otherwise, under patent claims, industrial property right, trademark, trade secret

Warranty Information and Legal Notices (continued)

or any other intellectual property rights covering combinations of these products or parts with other devices or elements. Seller retains all intellectual rights, title and interest in the products and its underlying technology, delivered hereunder including Seller's process, manufacturing and all other technologies used in Seller's performance hereunder.

14) **Financial Responsibility.** If in the sole Judgment of Seller the financial resources of Buyer become impaired or unsatisfactory at any time during the term of the agreement between the parties, then Seller may require of Buyer a deposit or suitable security or margin for performance by Buyer in such amount or amounts from time to time as Seller shall specify. Upon requirement of deposit, Buyer shall make such deposit not later than the close of Seller's next business day. If Buyer falls to make such deposit, then Seller may at its option (1) cancel the agreement between the parties or the undelivered portion thereof. In which case Buyer agrees to pay Seller the difference between the market price on date of cancellation and the contract price; (2) resell at any time for Buyer's account all or any undelivered portion of the products, in which case Buyer agrees to pay Seller the difference between the resale price and the contract price, or (3) otherwise change the terms of payment. In the event Buyer shall be or becomes insolvent, or admits in writing Buyer's inability to pay Buyer's debts as they mature, or if Buyer shall make an assignment with creditors or if there are instituted by or against Buyer proceedings in bankruptcy or under any insolvency laws or for reorganization, receivership or dissolution, Seller may terminate the agreement between the parties at any time and without notice.

15) **Force Majeure.** Including but not limited to events of war, fire, epidemics, quarantine restrictions, flood, strike, labor trouble, breakage of equipment, accident, riot, the imposition of any government price control regulation or any other act of governmental authority, acts of God or other contingencies (whether similar or dissimilar to the foregoing) beyond the reasonable control of Seller, interfering with the production, supply, transportation, or consumption practice of Seller at the time respecting the products covered by the agreement between the parties or in the event of inability to obtain on terms deemed by Seller to be practicable any raw material (Including without limitation energy source) used in connection therewith, quantities so affected shall be deemed to be an excusable delay in Seller's performance for the duration of time such condition exists. As promptly as practicable Seller will notify Buyer of any force majeure event that delays or threatens to delay Seller's timely performance hereunder. Seller may during any period of shortage due to any of these causes, allocate its supply of such raw material among its various uses therefore (e.g. manufacturing and sales) in such manner as Seller deems practicable and allocate its supply of such products among such various uses thereof in any manner which Seller deems fair and reasonable.

16) **Reasonable Attorneys' Fees.** In the event suit or other proceeding shall be brought for the recovery of the purchase price, or any unpaid balance or the breach by Buyer of any term of the agreement between Seller and Buyer, Buyer shall pay to Seller in addition to any damages provided by law, reasonable attorneys' fees and costs of collection.

17) **Security Title.** Security title and right of possession of the products sold hereunder shall remain with Seller until all payments due from Buyer to Seller (Including deferred payments whether evidenced by notes or otherwise) shall have been made in cash and Buyer agrees to do all acts necessary to perfect and maintain such security right and title in Seller.

18) **Cancellations.** Buyer may cancel an order only upon written consent and upon payment to Seller of cancellation charges, which shall take into account among other things expenses incurred and commitments already made by Seller, and Seller's profit margin.

19) **General.**

(a) The agreement between Buyer and Seller and matter connected with the performance thereof shall be construed in accordance with and governed by the law of the State of Michigan, without regard to its conflict of laws principles. The provisions of the United Nations Convention for the International Sale of Goods ("CISG") shall not govern the rights and obligations of the parties in connection with this order.

(b) Any assignment of the agreement between Buyer and Seller or any rights or obligation of the agreement by Buyer without written consent of Seller shall be void.

(c) Except as may be expressly provided to the contrary in writing, the provisions of the agreement between Buyer and Seller are for the benefit of the parties hereto and not for any other person.

(d) By accepting delivery of any goods sold by Seller, Buyer waives any future claims and rights of setoff or withholding against any payments due hereunder and agrees to pay all sums due regardless of any dispute, setoff, or cross claim.

(e) No waiver by Seller of any breach of any provision of the agreement between Buyer and Seller will constitute a waiver of any other breach.

(f) The terms and conditions set forth above contain all of the representations, stipulations, warranties, agreements and understandings with respect to the subject matter of the agreement between Buyer and Seller, and its execution has not been induced by any representation, stipulation, warranty, agreement or understanding (Including any course of prior dealings between the parties hereto) of any kind other than those set forth herein.

(g) No amendment, addition to, alteration, modification or waiver of all or part of the agreement between Buyer and Seller shall be of any force or effect unless in writing and signed by Seller. If the terms and conditions set forth above conflict with those of any purchase order of Buyer written in connection with the sale of the products or any portion thereof, then the terms set forth above shall govern.

(h) In addition to the rights and remedies conferred upon Seller by law, Seller shall not be required to proceed with the performance of any order or contract, if Buyer is in default in the performance of any order or contract with Seller, and in case of doubt as to Buyer's financial responsibility, shipments under this order may be suspended or sent sight draft with bill of lading attached by Seller.

(i) No delay or omission by Seller in exercising any right or remedy provided for herein shall constitute a waiver of such right or remedy and shall not be constituted as a bar to or a waiver of any such right or remedy on any future occasion.

20) **Entire Contract.** The terms and conditions set forth herein constitute the entire expression of all of the terms of this agreement and form a complete and exclusive statement as to the agreement between Seller and Buyer notwithstanding any other representations, promises, warranties, statements or agreements to the contrary. Any additional, contradictory or different terms contained in any initial or subsequent order or communication from Buyer pertaining to the products described on the face hereof are hereby objected to. No course of prior dealings between the parties and no usage of trade shall be relevant to supplement or explain any term used in this agreement. Acceptance or acquiescence in a course of performance rendered under this agreement shall not be relevant to determine the meaning of this Agreement even though the accepting or acquiescing party has knowledge of the nature of the performance and the opportunity for objection. No waiver or alteration of terms herein shall be binding unless in writing, signed by an executive officer of Seller.

21) **Compliance with Laws.** It is the intention of the parties that the transaction covered by these terms and conditions will at all times, be in compliance with all applicable laws including, without limitation, all export and import laws, regulations and restrictions, foreign corrupt practices and anti-bribery laws.

22) **Export Licensing/ITAR Representation.** Buyer agrees to comply with all applicable US and applicable non-US export and import laws and regulations, including but not limited to the International Traffic in Arms Regulations (ITAR) and the Export Administration Regulations (EAR) governing the export of any product and supporting technical data delivered hereunder. Furthermore, any controlled technical data

Warranty Information and Legal Notices (continued)

is not to be placed in the public domain, exported from the US, or given to any Foreign Person in the US without the prior specific written authorization of the Seller and the US Department of State or the US Department of Commerce as applicable. Notwithstanding anything that may be to the contrary Buyer's obligation as set forth in this provision shall survive the expiration or termination of this agreement. Buyer agrees to defend, indemnify, and hold Seller harmless from all claims or liabilities that may arise from Buyer's violation of any US or applicable non-US import or export laws.

23) Arbitration. With respect to sales in the United States, any controversy or claim arising out of or relating to the Agreement between Buyer and Seller, or the breach thereof, shall be finally settled in the City and State of the Seller's accepting offices, as referenced in Section 2, by arbitration in accordance with the Rules of the American Arbitration Association, and judgment upon the award rendered by the arbitrator may be entered in any court having jurisdiction thereof. With respect to sales outside the United States, any controversy or claim arising out of or relating to the Agreement between Buyer and Seller, or the breach thereof shall be finally settled in New York, NY under the Rules of Arbitration of the International Chamber of Commerce by one or more arbitrators appointed in accordance with the said Rules and judgment upon the award rendered by the arbitrator may be entered in any court having jurisdiction thereof pursuant to the 1958 Convention on the Recognition and Enforcement of Foreign Arbitral Awards.

2-0001-000-0013 Rev.: A

"RESPONSIBILITY STATEMENT"

WARNING

FAILURE OF, OR IMPROPER SELECTION OF, OR IMPROPER USE OF THE PRODUCTS DESCRIBED HEREIN OR RELATED ITEMS CAN CAUSE DEATH, PERSONAL INJURY AND PROPERTY DAMAGE.

This document and other information from Kaydon Bearings, its subsidiaries and authorized distributors provide product or system options for further investigation by users having technical expertise. Before you select or use any product or system, it is important that you analyze all aspects of your application and review the information concerning the product in the current product catalog. The user, through its own analysis and testing, is solely responsible for making the final selection of the product or system and assuring that all performance, safety and warning requirements of the application are met. The products and systems described herein, including without limitation, product features, specifications, designs, availability and pricing, are subject to change by Kaydon Bearings and its subsidiaries at any time without notice.

The registered trademarks of Kaydon Bearings include, but are not limited to, Kaydon®, Reali-Slim®, Lami-Shield®, Lami-Seal®, Reali-Design®, Reali-Design MM®, Kaydon infinite® bearing solutions, Endurakote®, WireX®, Endura-Slim®, Endura-Vac®, Ultra-Slim®, Reali-Slim TT®, Reali-Slim MM®, Thinifinite®, Slewinfinite®.

Kaydon
bearing
solutions



Kaydon Bearings
2860 McCracken Street
Muskegon, Michigan 49441 USA

231.755.3741 tel
800.514.3066 free
231.759.4102 fax

bearings@kaydon.com
www.kaydon**bearings**.com

©2017 Kaydon Bearings
Printed in USA, 3K 17-01-01 Cat 390

an SKF Group brand